016.40.177 1136 021104 DONADINI srl

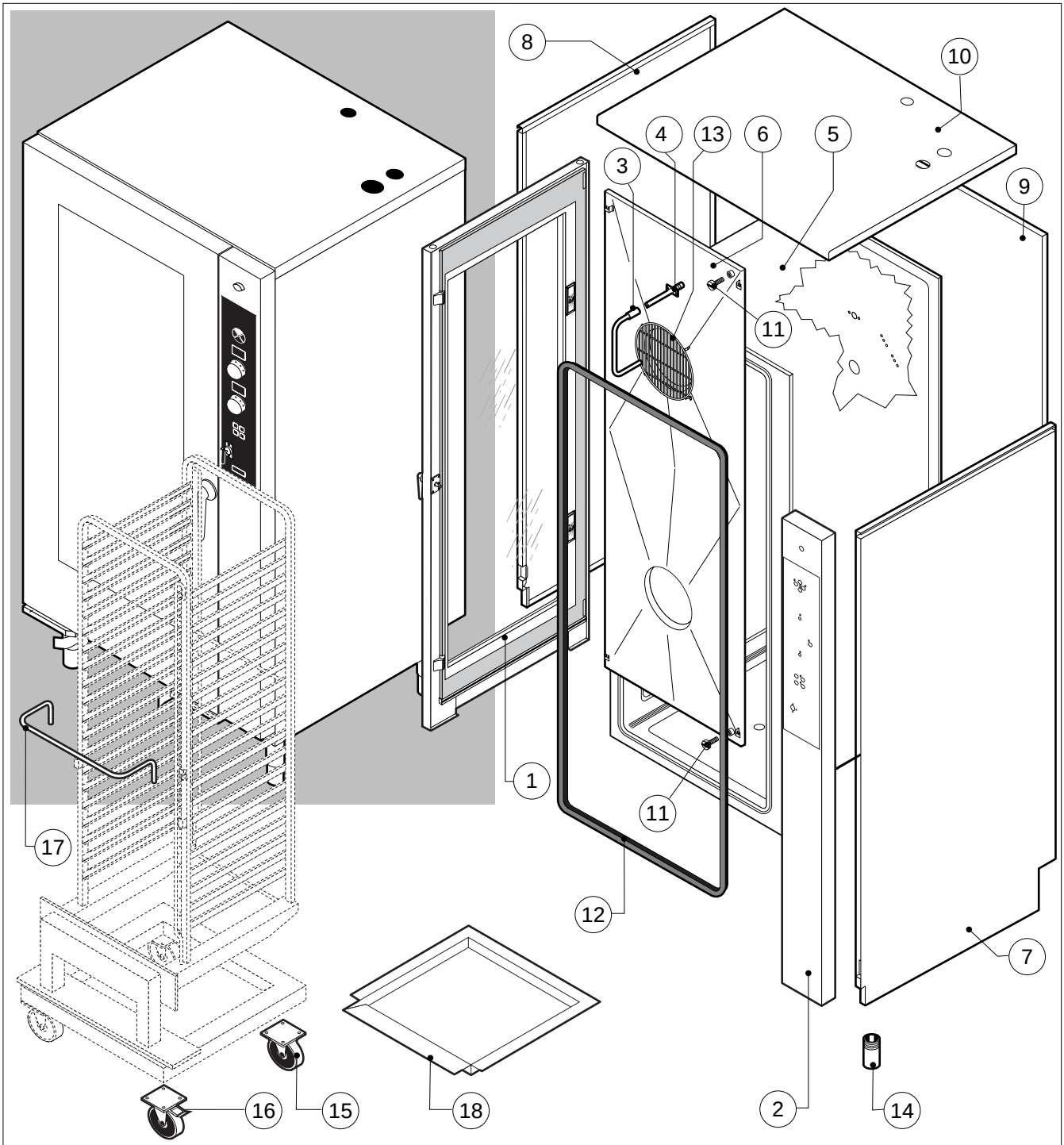

POS.	CODE	PIECES	DESCRIPTION
1	R11100121	1	DOOR ASSEMBLY
2	R11208480	1	CONTROL PANEL
3	R11201970	1	SPRITZER EXTENSION
4	R11200380	1	SPRITZER UNION
5	R11100960	1	COOKING CABINET ASSEMBLY
6	R11205280	1	FAN GUARD PANEL ASSEMBLY
7	R11205321	1	RIGHT SIDE PANEL
8	R11205311	1	LEFT SIDE PANEL
9	R11411601	1	REAR PANEL
10	R11205290	1	COVER PANEL
11	R58003100	2	FAN GUARD FASTENING SCREW
12	R70044130	1	FRONT GASKET
13	R75300090	2	FAN GUARD GRID Ø 350
14	R69070020	4	FOOT 1"1/2x130
15	R69090090	2	WHEEL
16	R69090100	2	WHEEL WITH BRAKE
17	R10457840	1	HANDLE FOR TROLLY
18	R11204670	1	TRAY FOR TROLLEY

POS.	CODE	PIECES	DESCRIPTION

EDIZIONE 0604

ME 201 D

tav. A

016.40.177 1137 021104 DONADINI srl

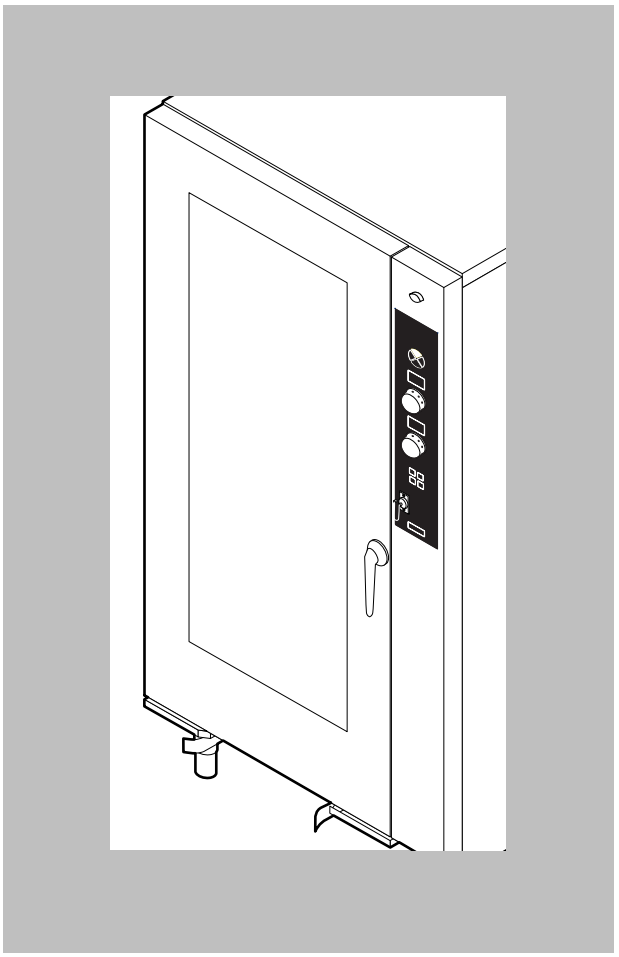

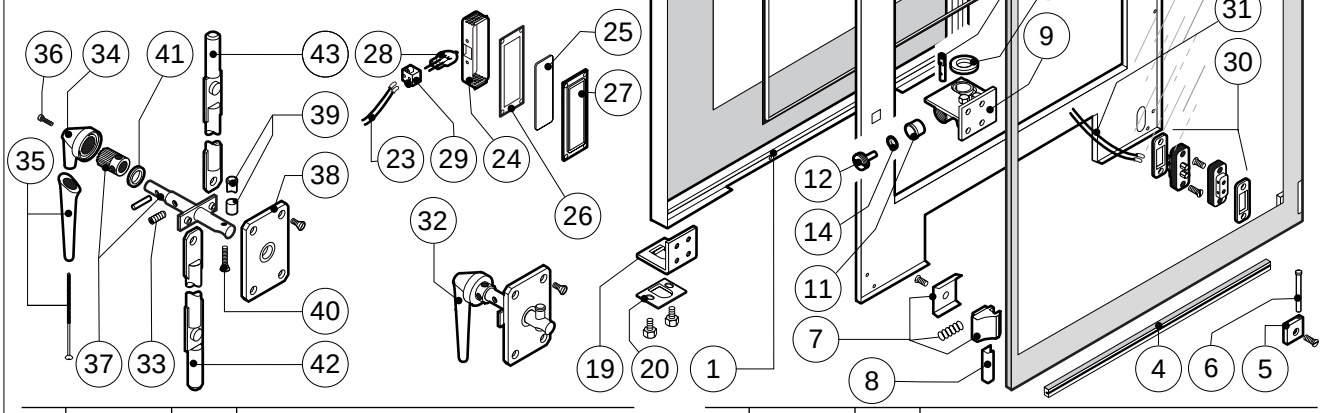

POS.	CODE	PIECES	DESCRIPTION
1	R11100181	1	DOOR
2	R11205361	1	INNER DOOR PANEL
3	R11100150	1	INNER DOOR GLASS
4	R70044300	1	GASKET FOR TROLLEY(0,7MT)
5	R58001760	2	INNER GLASS SOLID HINGE
6	R58001770	2	INNER GLASS HINGE PIN
7	R58001780	2	INNER GLASS CATCH KIT
8	R11411860	2	"C" PROFILE
9	R11205390	1	LOWER DOOR HINGE WITH RETAINER
10	R58002540	1	DOOR PIVOT SUNK KEY
11	R58002550	1	DOOR RETAINER GUIDE SHOE
12	R58002560	1	SCREW FOR LOWER DOOR HINGE
13	R58002570	1	WASHER Ø 30/15x3
14	R61620091	16	BELLEVILLE WASHER Ø 14/6.4
15	R11200560	1	UPPER DOOR HINGE
16	R58002150	1	HINGE PIN
17	R58004050	1	NUT FOR UPPER DOOR HINGE
18	R11411520	1	UPPER SQUARE FOR DOOR ROD
19	R11205400	1	LOWER SQUARE FOR DOOR ROD
20	R10207680	2	DOOR ROD ADJUSTABLE PLATE
21	R70050100	9	GLASS SILICON SPACERS
22	R70044160	1	GLASS GASKET (3,72MT)

POS.	CODE	PIECES	DESCRIPTION
23	R66110320	1	DOOR LAMPS CABLE SET
24	R11401440	2	LAMP COVER
25	R71500150	2	GLASS LAMP
26	R70044200	2	GLASS LAMP
27	R11401450	2	GLASS HOLDER LAMP FLANGE
28	R65270020	2	LIGHT 20W 12V G4
29	R65270450	2	LIGHT SOCKET
30	R65260750	1	LAMPS CONTACT BLOCK
31	R66110330	1	LAMPS CONTACT CABLE SET
32	R11100310	1	DOOR HANDLE ASSEMBLY
33	R61090052	1	GRUB SCREW M6x16
34	R69010600	1	DOOR HANDLE
35	R69010610	1	HANDLE
36	R61030601	1	CYLINDRICAL HEAD SCREW
37	R11205340	1	DOOR HANDLE PIN
38	R03200970	1	DOOR LOCK REAR FLANGE
39	R58004781	1	DOOR HANDLE HOOK
40	R61040272	1	DOOR HANDLE HOOK SCREW
41	R61420021	1	ELASTIC WASHER
42	R11205381	1	LOWER DOOR ROD
43	R11205370	1	UPPER DOOR ROD

016.40.177 1138 021104 DONADINI srl

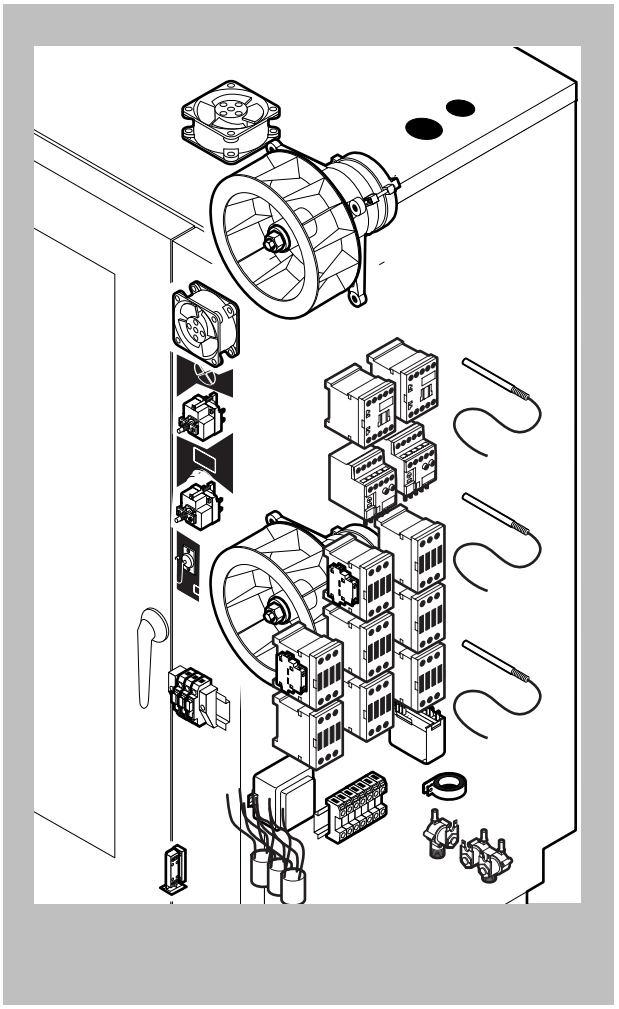

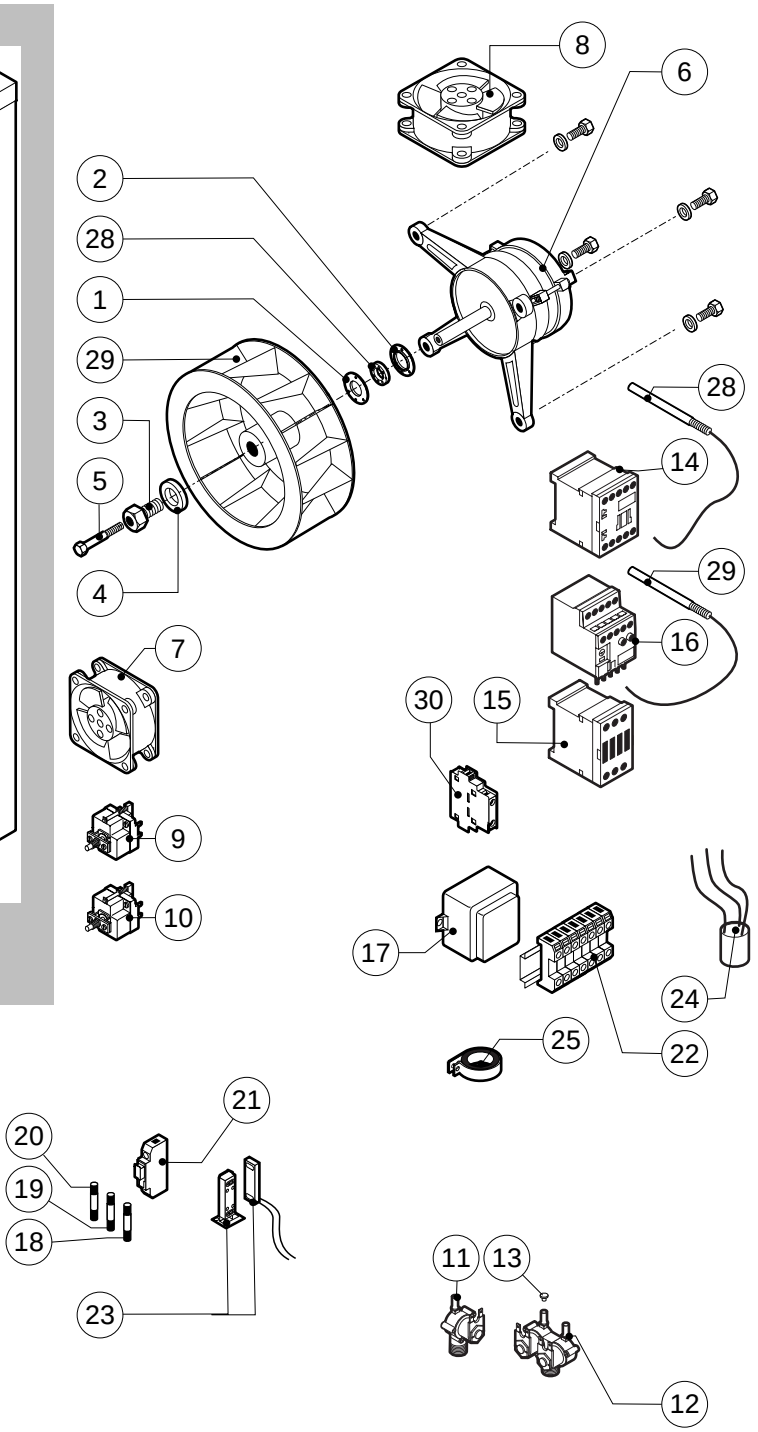

POS.	CODE	PIECES	DESCRIPTION
1	R58003840	2	MOTOR GASKET BRASS FLANGE
2	R58003850	2	MOTOR GASKET BRASS COUNTER FLANGE
3	R58004000	2	FAN SCREW M12x1.5 SX
4	R58004010	2	FAN WASHER Ø 30/12.5
5	R61020562	2	FAN SCREW TE A2 M6x55
6	*R65040530	2	MOTOR 055/015 KW KIT
7	R65060050	2	COMPONENTS VENTILATION MOTOR Ø 120
8	R65060060	1	COMPONENTS VENTILATION MOTOR Ø 150
9	R65070350	1	CHAMBER SAFETY THERMOSTAT
10	R65070081	1	STEAM GENERATOR SAFETY THERMOSTAT
11	R65110200	1	SOLENOID VALVE 220V 50HZ
12	R65110210	1	SOLENOID VALVE 220V 50HZ WITH FLOW REDUCER
13	R65110510	2	15 LT/H WATER FLOW REDUCER
14	*R65140380	2	CONTACTOR 3RT1016-1AP02 240V
15	*R65140400	8	CONTACTOR 3RT1025-1AL20 240V
16	*R65160620	2	THERMIC PROTECTION 3RU1116-1BB0 1,4-2,0A
17	R65180430	1	TRANSFORMER 40VA
18	R65200200	1	FUSE 2A
19	R65200320	1	FUSE 0.25A (T)

POS.	CODE	PIECES	DESCRIPTION
20	R65200120	1	FUSE 0.1A (T)
21	R65210020	3	FUSE CARRIER
22	R65220130	1	TERMINAL BOARD
23	R65265100	1	DOOR SWITCH
24	*R65280200	3	INTERFERENCE SUPPRESSOR
25	*R65280450	1	FERRITE
26	R65325000	2	PROBE PT100 (1,5 MT LONG)
27	R65325010	1	PROBE PT100 (3 MT LONG)
28	R70020050	2	MOTOR GASKET
29	*R75400440	2	FAN Ø 350x114/12 50HZ P.D. KIT
30	*R65140430	2	AUX.CONTACT 1L+1R 3RH1921-1FA11

*COMPONENT SUBMITTED TO CHANGEMENTS CAUSED BY TENSION DIFFERENT FROM THE STANDARD (3N AC400V 50HZ)

EDIZIONE 0604

ME 201 D

tav. C

016.40.177 1140 021104 DONADINI srl

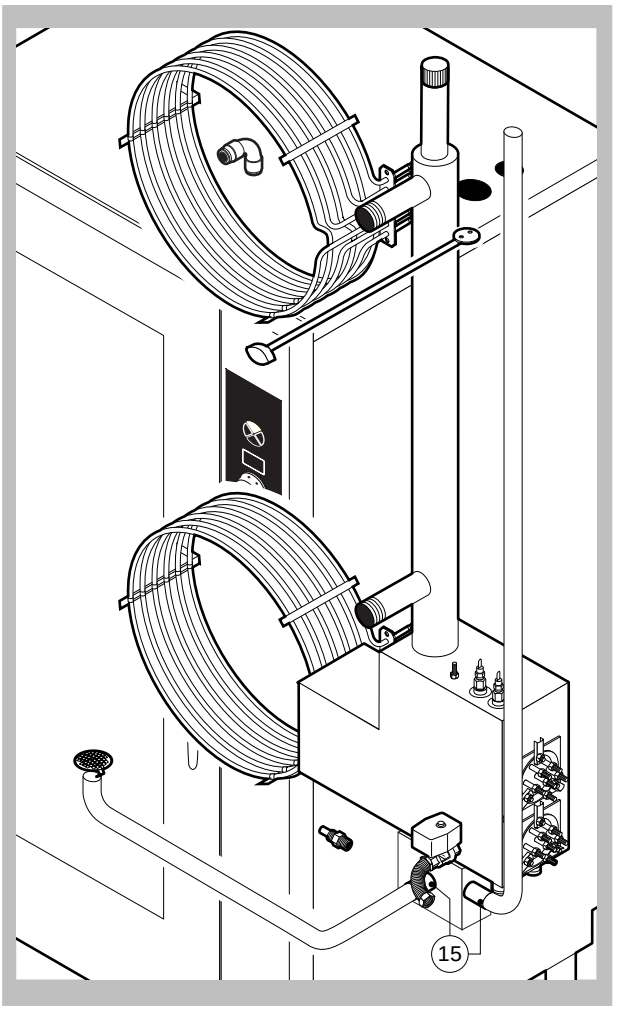

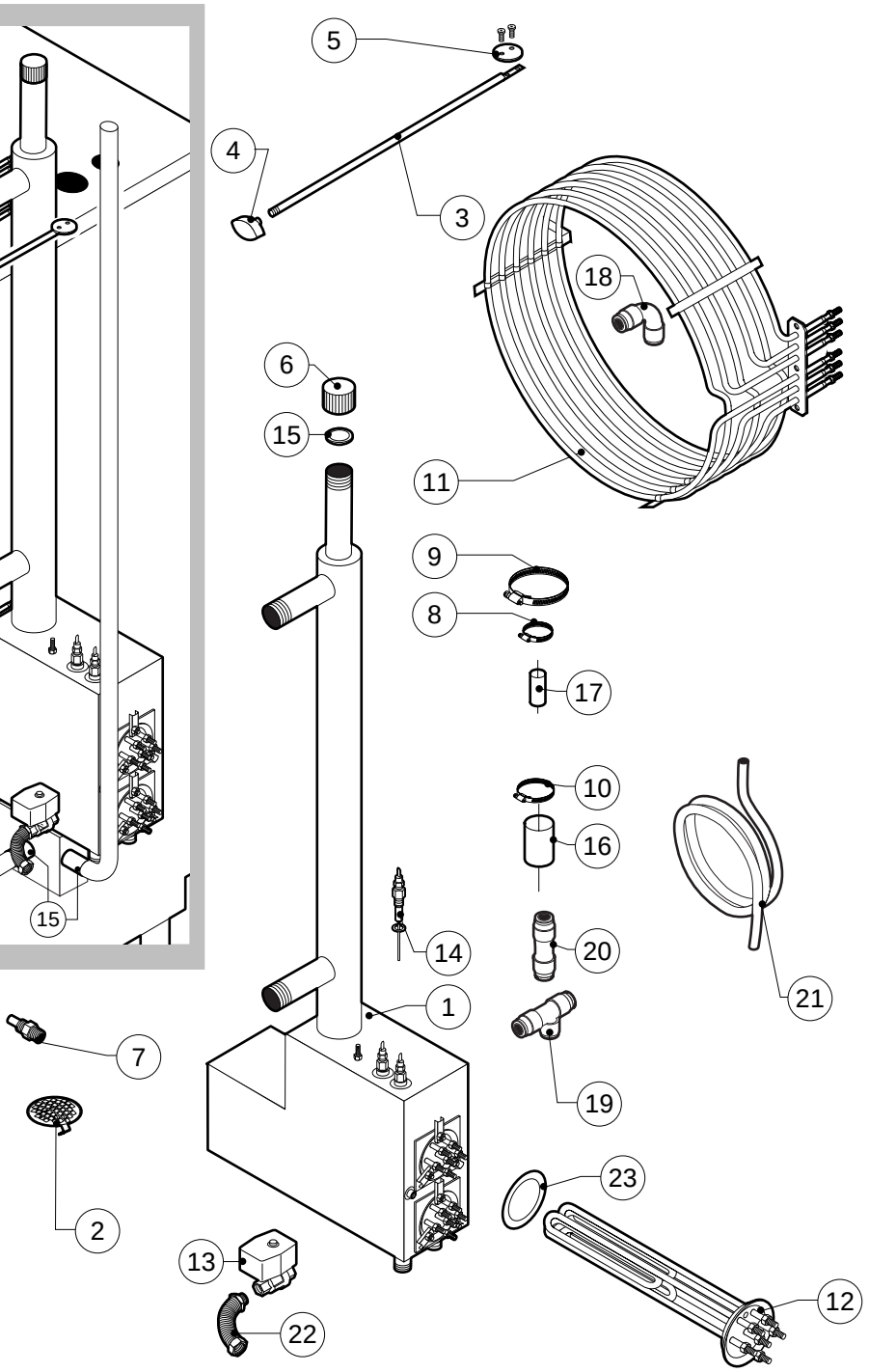

POS.	CODE	PIECES	DESCRIPTION
1	R11100470	1	STEAM GENERATOR ASSEMBLY
2	R10201710	1	DRAIN FILTER
3	R58003770	1	CHAMBER VENT ROD
4	R69010410	1	STEAM OUTLET KNOB
5	R11406870	1	CHAMBER VENT PLATE Ø 76
6	R58005680	1	STEAM GENERATOR DESCALING CAP 1"1/4 F
7	R58006130	2	STEAM QUENCHING NOZZLE Ø 1
8	R61630011	2	METAL CLAMPS 12-22/9
9	R61630091	2	METAL CLAMPS 140-160/9
10	R61630031	4	METAL CLAMPS 40-60/9
11	*R65011310	2	CHAMBER HEATING ELEMENT 15000W
12	*R65020421	2	STEAM GENERATOR HEATING ELEMENT 15000W
13	R65110560	1	STEAM GENERATOR DRAIN MOTORIZED VALVE
14	R65320010	2	STEAM GENERATOR LEVEL PROBE
15	R70050040	1	STEAM GENERATOR CAP GASKET
16	R70060040	2	SILICON COUPLING Ø 50
17	R70060080	1	SILICON COUPLING Ø 13
18	R62090478	5	ELBOW MIDDLING PIPE FITTING D.10
19	R62090468	1	"T" MIDDLING PIPE FITTING D.10

POS.	CODE	PIECES	DESCRIPTION
20	R62090458	1	STRAIGHT MIDDLING PIPE FITTING D.10
21	R70070040	1	PE D.10 MM X7 WATER FLEXIBLE PIPE (4 MT LONG)
22	R62180022	1	FLEXIBLE PIPE FOR BOILER DISCALING
23	R70045010	2	STEAM GENERATOR HEATING ELEMENT GASKET

*COMPONENT SUBMITTED TO CHANGEMENTS CAUSED BY TENSION DIFFERENT FROM THE STANDARD (3N AC400V 50HZ)

EDIZIONE 0604

ME 201 D

tav. D

016.40.177 1140 301104 DONADINI srl

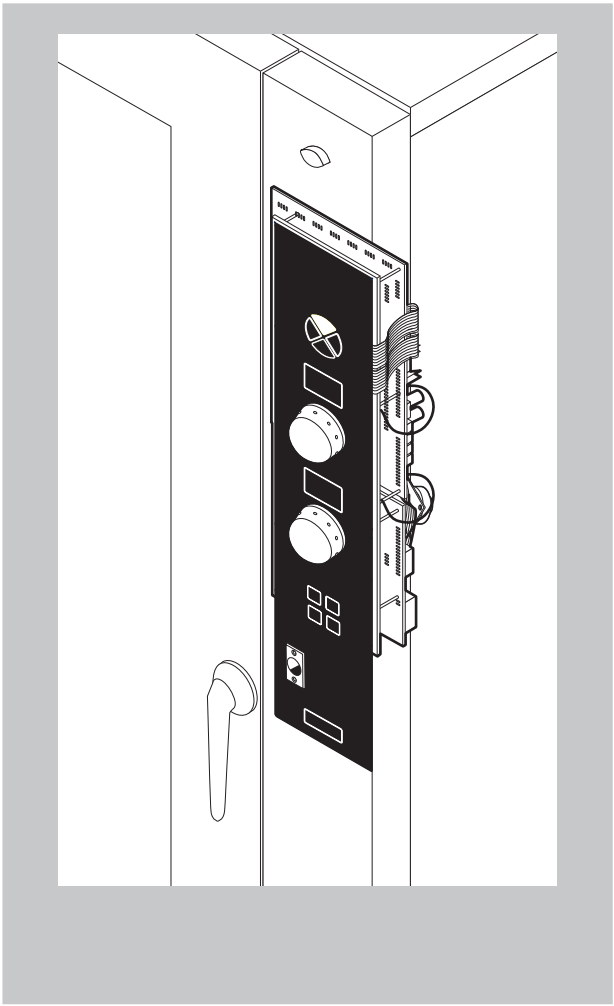

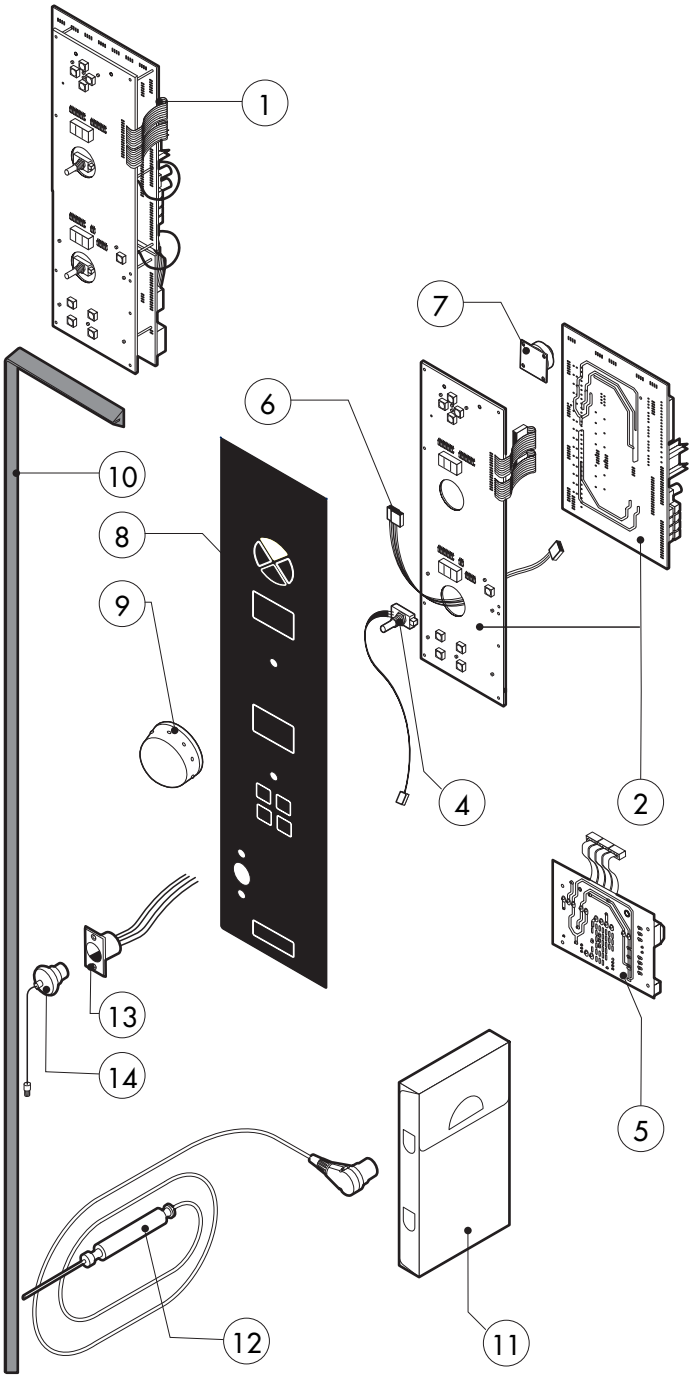

POS.	CODE	PIECES	DESCRIPTION
1	R65301310	1	CONTROL PANEL P.C. BOARD
2	R65301320	1	FRONT PC BOARD "D" MOD
4	R65301450	2	FRONT PC BOARD ENCODER
5	R65301480	1	BOILER CONTROL PC BOARD "H-P" MOD
6	R65301340	1	PC BOARD FLAT CABLE
7	R65301440	1	PC BOARD BUZZER
8	R67012890	1	LAINOX PLATE
9	R69030260	2	KNOB
10	R70044280	1	CONTROL PANEL GASKET
11	R86020420	1	CORE TEMPERATURE PROBE BOX
12	R65321120	1	CORE TEMPERATURE PROBE
13	R65320920	1	CORE TEMPERATURE PROBE FEMALE CONNECTOR
14	R65321020	1	COVER FOR FEMALE CONNECTOR

POS.	CODE	PIECES	DESCRIPTION

EDIZIONE 0604

ME 201 D

tav. E