016.40.132 2836 091100 DONADINI & C

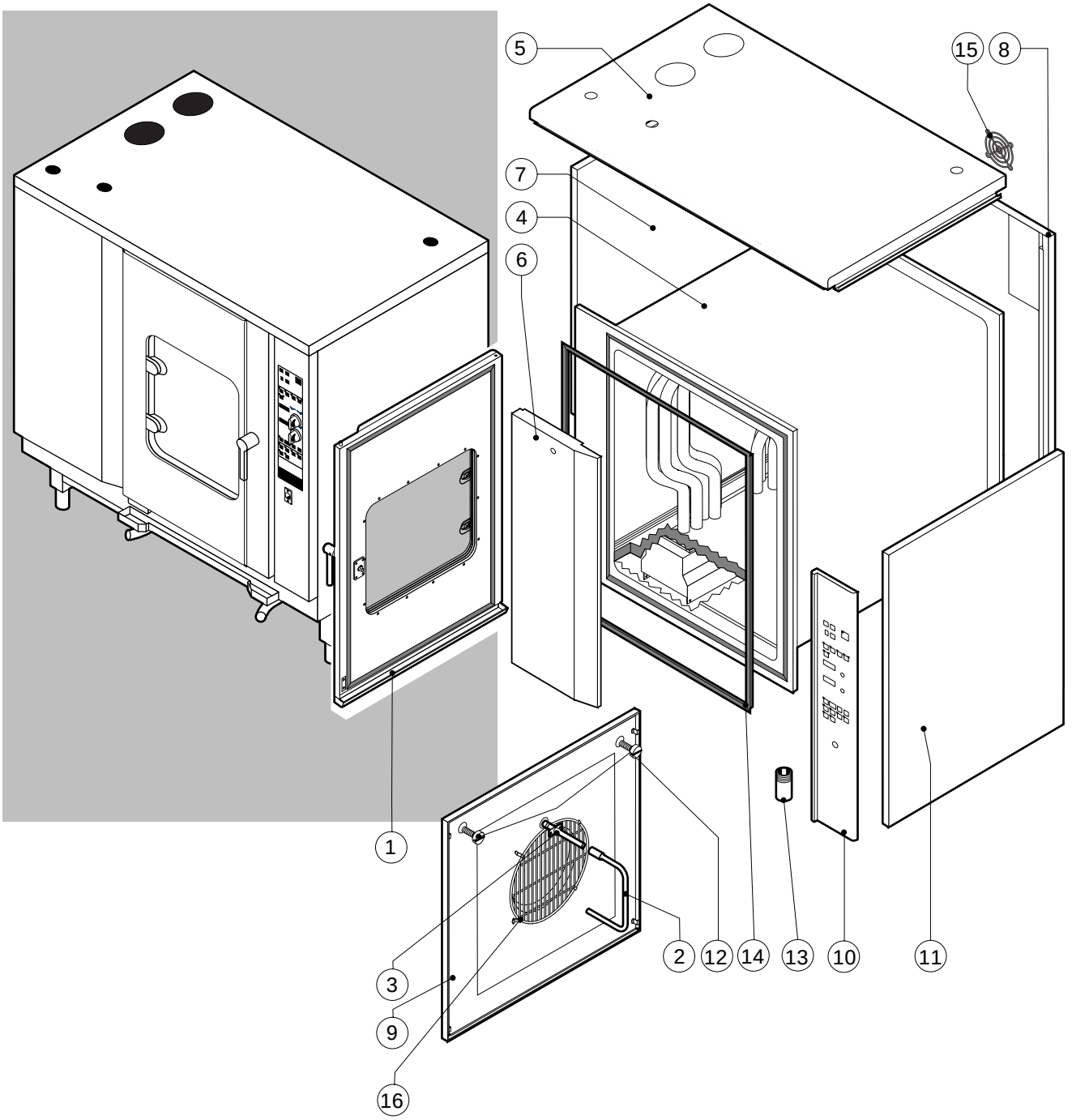

POS.	CODE	PIECES	DESCRIPTION
1	R10104290	1	DOOR ASSEMBLY
2	R10206480	1	SPRITZER EXTENSION
3	R10206540	1	SPRITZER UNION
4	R10222010	1	COOKING CABINET ASSEMBLY
5	R10222090	1	COVER PANEL
6	R10222170	1	FRONT LEFT PANEL
7	R10222230	1	LEFT SIDE PANEL
8	R10222240	1	REAR PANEL
9	R10222260	1	FAN GUARD PANEL ASSEMBLY
10	R10222370	1	CONTROL PANEL
11	R10460830	1	RIGHT SIDE PANEL
12	R58003100	2	FAN GUARD FASTENING SCREW
13	R69070020	4	FOOT 1"1/2x133
14	R70043290	1	FRONT GASKET
15	R75300020	2	FAN GUARD GRID Ø 120
16	R75300090	1	FAN GUARD GRID Ø 350

POS.	CODE	PIECES	DESCRIPTION

EDIZIONE 0999

MGS 24 H

tav. A

016.40.132 2837 091100 DONADINI & C

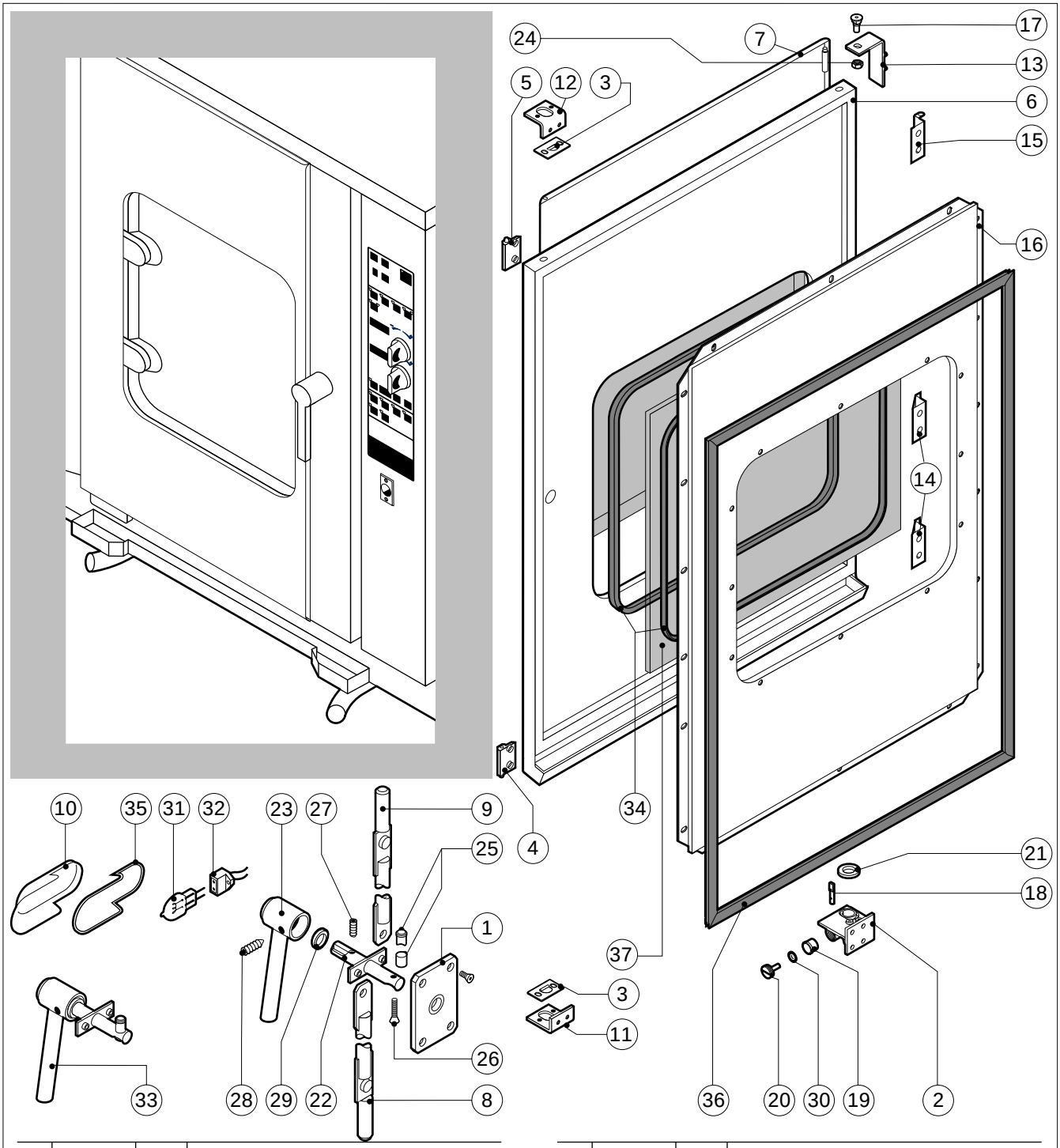

POS.	CODE	PIECES	DESCRIPTION
1	R03200970	1	DOOR LOCK REAR FLANGE
2	R10201330	1	LOWER DOOR HINGE WITH RETAINER
3	R10207680	2	DOOR ROD ADJUSTABLE PLATE
4	R10208290	1	FRONT LOWER DOOR PANEL CATCH
5	R10208300	1	FRONT UPPER DOOR PANEL CATCH
6	R10221960	1	DOOR
7	R10222080	1	FRONT DOOR PANEL
8	R10222140	1	LOWER DOOR ROD
9	R10222150	1	UPPER DOOR ROD
10	R10400150	2	LIGHT PROTECTION
11	R10411350	1	LOWER SQUARE FOR DOOR ROD
12	R10411360	1	UPPER SQUARE FOR DOOR ROD
13	R10413290	1	UPPER DOOR HINGE
14	R10456040	2	LOWER HINGE FOR FRONT DOOR PANEL
15	R10456050	1	UPPER HINGE FOR FRONT DOOR PANEL
16	R10460360	1	INNER DOOR PANEL
17	R58002150	1	HINGE PIN
18	R58002540	1	DOOR PIVOT SUNK KEY
19	R58002550	1	DOOR RETAINER GUIDE SHOE

POS.	CODE	PIECES	DESCRIPTION
20	R58002560	1	SCREW FOR LOWER DOOR HINGE
21	R58002570	1	WASHER Ø 30/15x3
22	R58003180	1	DOOR HANDLE PIN
23	R58003450	1	DOOR HANDLE
24	R58004050	1	NUT FOR UPPER DOOR HINGE
25	R58004781	1	DOOR HANDLE HOOK
26	R61040272	1	DOOR HANDLE HOOK SCREW
27	R61090052	1	GRUB SCREW M6x16
28	R61100262	1	GRUB SCREW M8x20
29	R61420021	1	ELASTIC WASHER
30	R61620091	16	BELLEVILLE WASHER Ø 14/6.4
31	R65270020	2	LIGHT 20W 12V G4
32	R65270400	2	LIGHT SOCKET
33	R69015050	1	DOOR HANDLE ASSEMBLY
34	R70040200	2	GLASS GASKET
35	R70040800	2	LIGHT PROTECTION GASKET
36	R70041930	1	DOOR GASKET
37	R71030120	1	DOOR GLASS

016.40.132 2838 091100 DONADINI & C

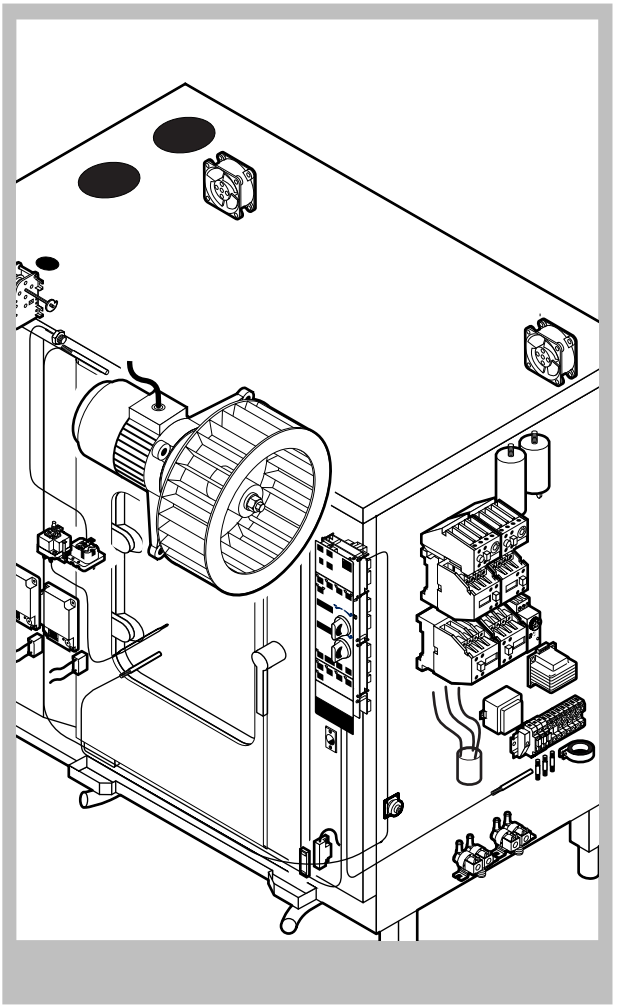

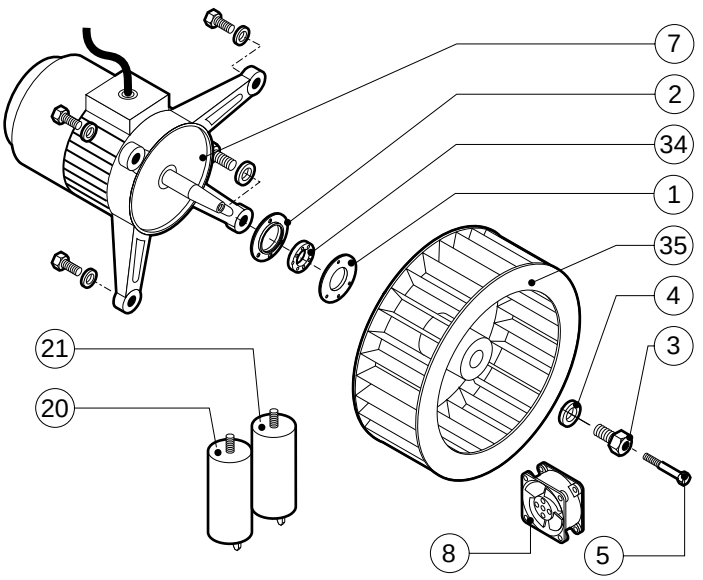

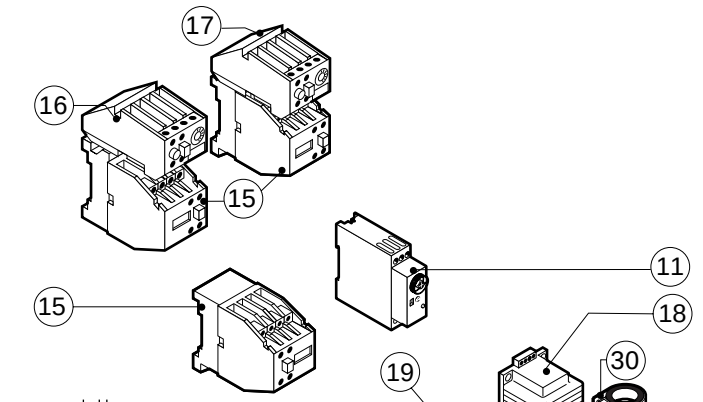

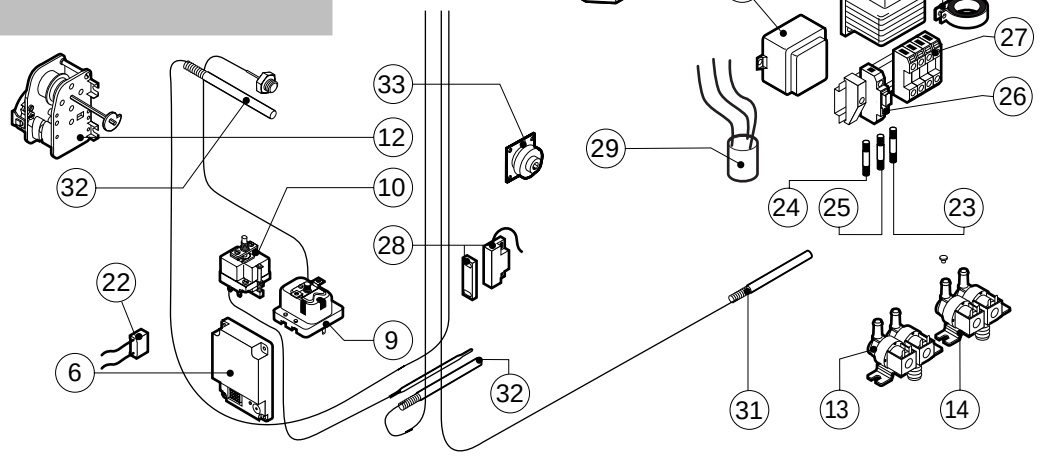

POS.	CODE	PIECES	DESCRIPTION
1	R58003840	1	MOTOR GASKET BRASS FLANGE
2	R58003850	1	MOTOR GASKET BRASS COUNTER FLANGE
3	R58004000	1	FAN SCREW M12x1.5 SX
4	R58004010	1	FAN WASHER Ø 30/12.5
5	R61020562	1	FAN SCREW TE A2 M6x55
6	R63060080	2	BURNER IGNITION PANEL WR 50A72-214
7	R65040031	1	MOTOR HP 1/0.3 KIT
8	R65060050	2	COMPONENTS VENTILATION MOTOR Ø 120
9	R65070070	1	CHAMBER SAFETY THERMOSTAT
10	R65070080	1	STEAM GENERATOR SAFETY THERMOSTAT
11	R65090450	2	IGNITION DELAY TIMER
12	R65095000	1	DAMPER SYSTEM
13	R65110040	1	SOLENOID VALVE 220V 50HZ
14	R65115000	1	SOLENOID VALVE 220V 50HZ WITH FLOW REDUCER
15	R65140150	4	CONTACTOR 3TF4011-OAUO 240V
16	R65160120	1	THERMIC PROTECTION 3UA5000-1C 1.6-2.5A
17	R65160130	1	THERMIC PROTECTION 3UA5000-1F 3.2-5A
18	R65180430	1	TRANSFORMER 40VA
19	R65180650	1	TRANSFORMER 23VA

POS.	CODE	PIECES	DESCRIPTION
20	R65190030	1	CAPACITOR 16 µF
21	R65190090	1	CAPACITOR 12.5 µF
22	R65190200	2	INTERFERENCE SUPPRESSOR
23	R65200200	1	FUSE 2A
24	R65200320	1	FUSE 0.2A (T)
25	R65200350	1	FUSE 0.4A (T)
26	R65210020	3	FUSE CARRIER
27	R65220220	1	TERMINAL BOARD
28	R65265100	1	DOOR SWITCH
29	R65280210	1	INTERFERENCE SUPPRESSOR
30	R65280450	1	FERRITE
31	R65325000	1	PROBE PT100
32	R65325010	2	PROBE PT100 3m
33	R65330040	1	BUZZER
34	R70020050	1	MOTOR GASKET
35	R75400380	1	FAN Ø 350x120/24 50HZ P.D. KIT

016.40.132 1339 091100 DONADINI & C

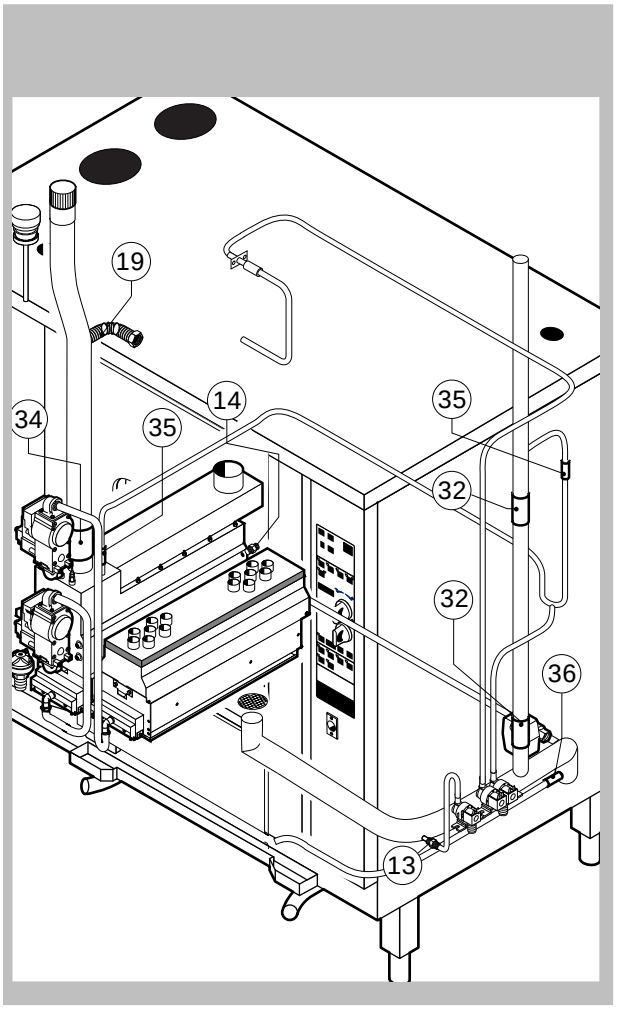

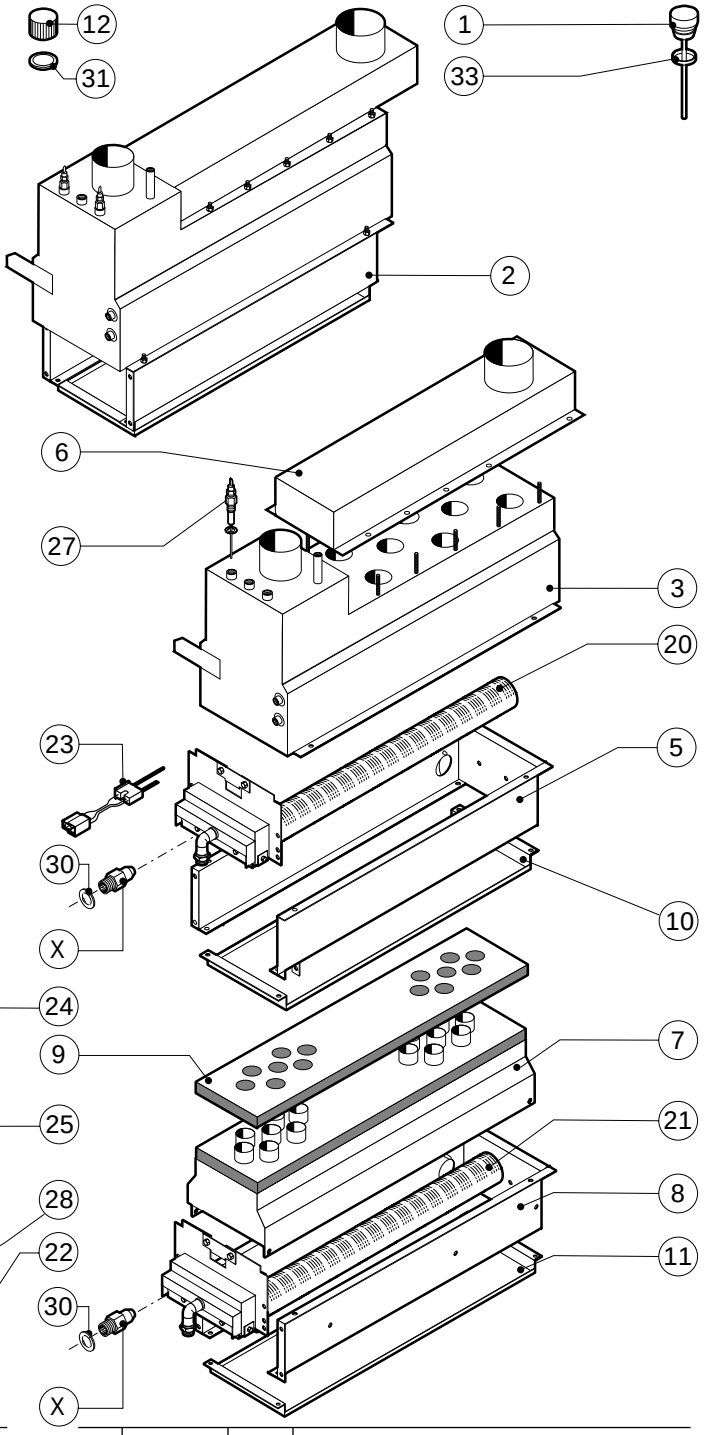

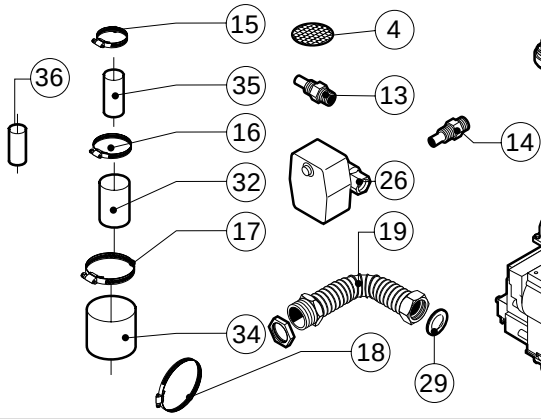

POS.	CODE	PIECES	DESCRIPTION
1	R10100140	1	DAMPER SYSTEM CAP
2	R10102160	1	STEAM GENERATOR ASSEMBLY
3	R10201000	1	STEAM GENERATOR
4	R10201720	1	DRAIN FILTER
5	R10202600	1	STEAM GENERATOR SUPPORT
6	R10211860	1	STEAM GENERATOR GAS FLUE PIPE
7	R10222280	1	COMBUSTION CABINET
8	R10222310	1	CABINET BURNERS SUPPORT
9	R10406250	1	COMBUSTION CABINET INSULATION PLATE
10	R10409400	1	STEAM GENERATOR BURNERS PROTECTION PLATE
11	R10414110	1	CHAMBER BURNERS PROTECTION PLATE
12	R58005680	1	STEAM GENERATOR DESCALING CAP 1"1/4 F
13	R58006080	1	STEAM QUENCHING NOZZLE Ø 2
14	R58006110	2	STEAM GENERATOR FLUSHING NOZZLE
15	R61630011	12	METAL CLAMPS 12-22/9
16	R61630021	2	METAL CLAMPS 30-45/9
17	R61630031	2	METAL CLAMPS 40-60/9
18	R61630071	4	METAL CLAMPS 110-130/9
19	R62180032	1	"FLEXIBLE STEEL PIPE Ø 1""1/4 ASSEMBLY"

POS.	CODE	PIECES	DESCRIPTION
20	R63016100	1	STEAM GENERATOR BURNER ASSEMBLY
21	R63016120	1	CHAMBER BURNER ASSEMBLY
22	R63020010	2	GAS SOLENOID VALVE VR4605
23	R63050040	2	IGNITOR/SENSOR WR 768G213
24	R63070010	1	GAS SAFETY PRESSURE SWITCH PG 901.61
25	R63080020	4	CURVED FLANGE 1/2"
26	R65110540	1	STEAM GENERATOR DRAIN MOTORIZED VALVE
27	R65320010	2	STEAM GENERATOR LEVEL PROBE
28	R70010070	4	RING
29	R70030080	1	GASKET Ø 27x39 1"1/4
30	R70030090	4	NOZZLE GASKET
31	R70050040	1	STEAM GENERATOR CAP GASKET
32	R70060010	2	SILICON COUPLING Ø 30
33	R70060020	1	DAMPER SYSTEM CAP GASKET
34	R70060040	1	SILICON COUPLING Ø 50
35	R70060060	2	SILICON COUPLING Ø 15
36	R70060080	1	SILICON COUPLING Ø 13
X		2	NOZZLE (See service manual)
X		2	NOZZLE (See service manual)

016.40.132 2840 091100 DONADINI & C

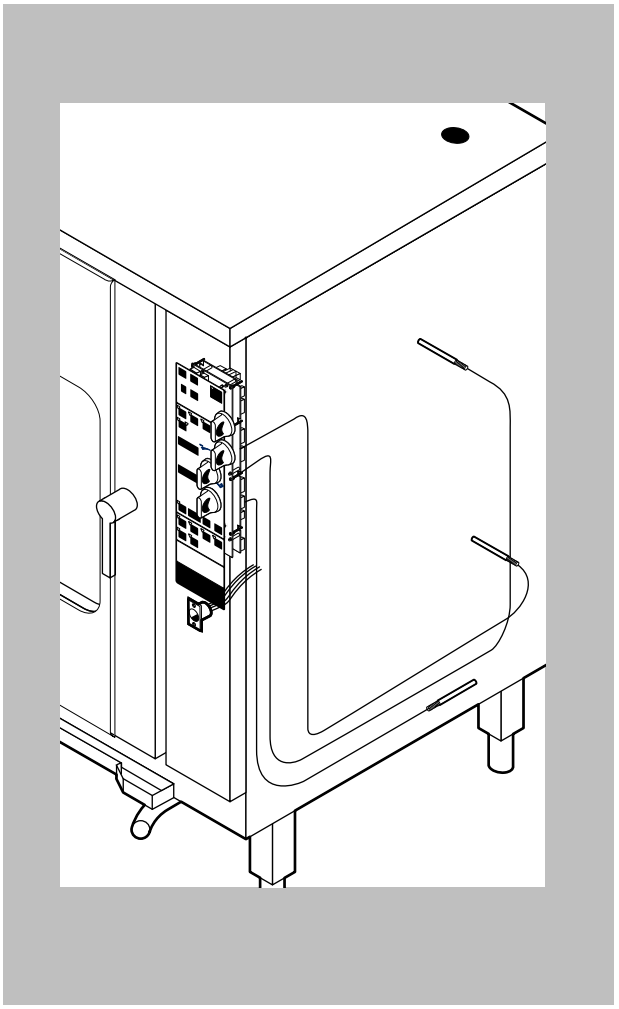

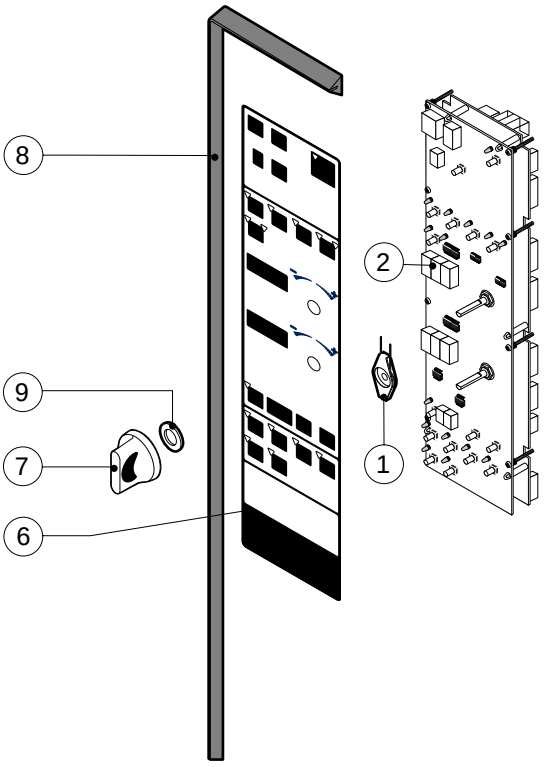

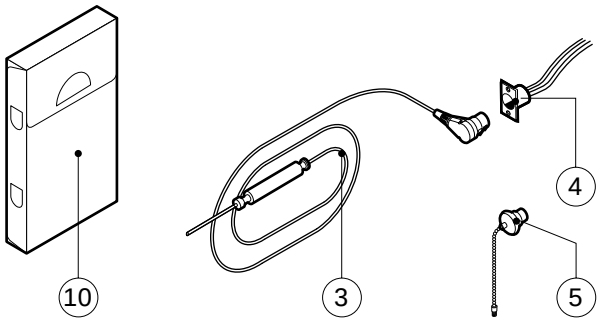

POS.	CODE	PIECES	DESCRIPTION
1	R10205120	2	KNOB SPRING
2	R65300820	1	CONTROL PANEL P.C. BOARD
3	R65320900	1	CORE TEMPERATURE PROBE
4	R65320920	1	CORE TEMPERATURE PROBE FEMALE CONNECTOR
5	R65321020	1	COVER FOR FEMALE CONNECTOR
6	R67010660	1	LAINOX PLATE
7	R69030150	2	KNOB KIT
8	R70040860	1	CONTROL PANEL GASKET
9	R70050020	4	KNOB GASKET
10	R86020420	1	CORE TEMPERATURE PROBE BOX

POS.	CODE	PIECES	DESCRIPTION