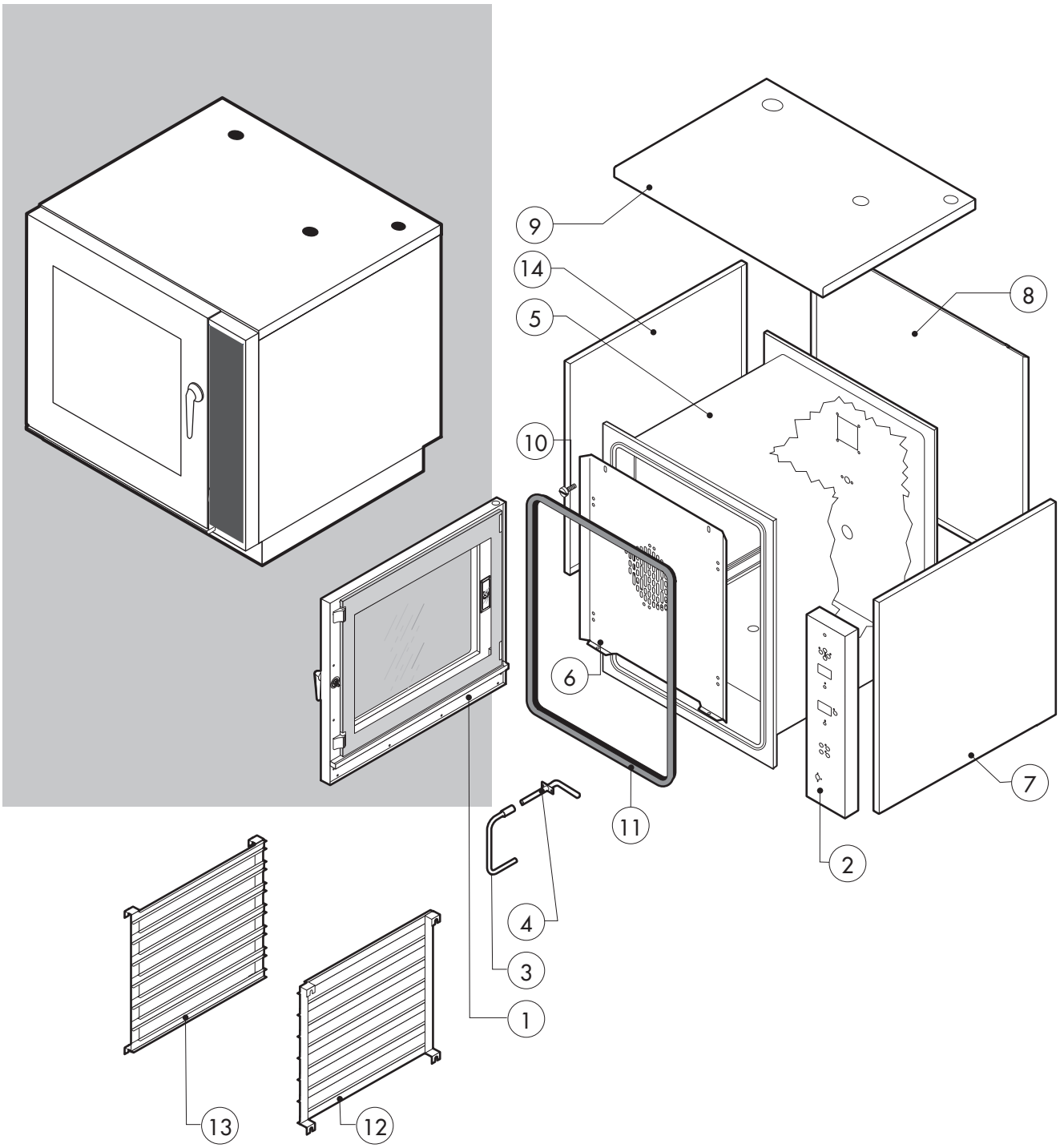

POS.	CODE	PIECES	DESCRIPTION
1	R18100171	1	DOOR ASSEMBLY
2	R18203490	1	CONTROL PANEL
3	R11200650	1	SPRITZER EXTENSION
4	R11202270	1	SPRITZER UNION
5	R18210361	1	COOKING CABINET ASSEMBLY
6	R18421230	1	FAN GUARD PANEL ASSEMBLY
7	R18420950	1	SIDE PANEL
8	R18420980	1	REAR PANEL
9	R18420400	1	COVER PANEL
10	R58006400	4	FAN GUARD FASTENING SCREW
11	R70044820	1	FRONT GASKET
12	R18421370	1	REMOVABLE RACK DX
13	R18421380	1	REMOVABLE RACK SX
14	R18401040	1	LEFT SIDE PANEL

POS.	CODE	PIECES	DESCRIPTION

Serie New

EDIZIONE 0211

SVG 071 P **tav. A**

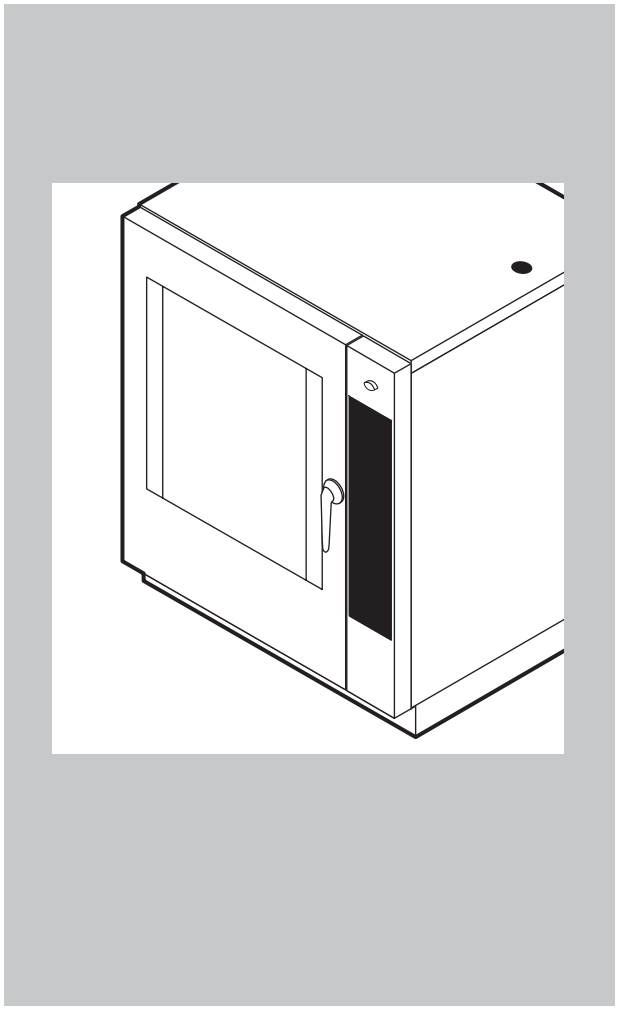

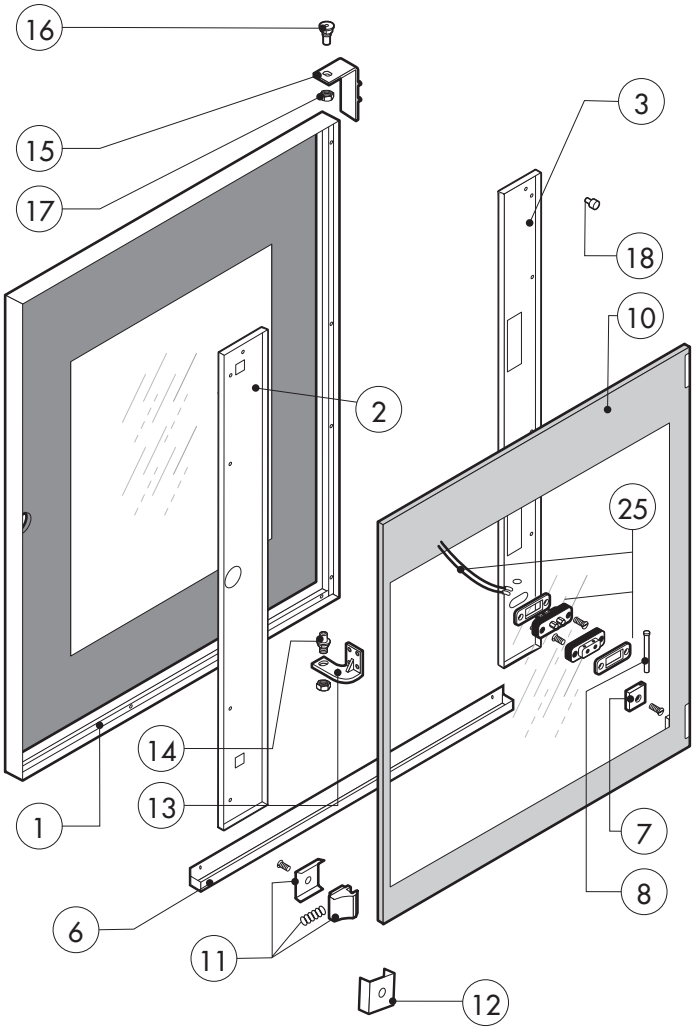

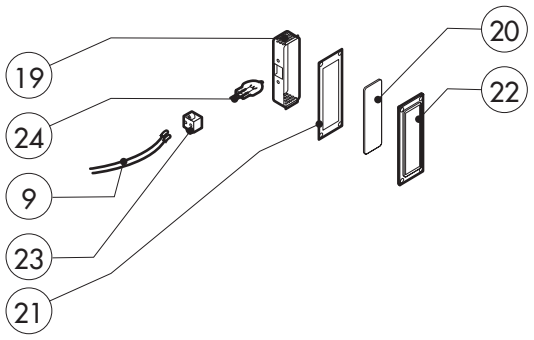

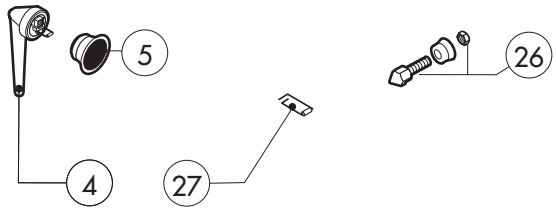

POS.	CODE	PIECES	DESCRIPTION
1	R18203260	1	DOOR
2	R18420761	1	RIGHT DOOR POST
3	R18420771	1	LEFT DOOR POST
4	R69010210	1	DOORHANDLE
5	R69010630	1	DOORHANDLE COVER
6	R18420811	1	DOOR BASIN
7	R58001760	2	INNER GLASS SOLID HINGE
8	R58001770	2	INNER GLASS HINGE PIN
9	R66110320	1	DOOR LAMPS CABLE SET
10	R71201550	1	OUTER DOOR GLASS
11	R58001780	2	INNER GLASS CATCH KIT
12	R11401350	2	OUTER DOOR GLASS FLANGE
13	R18404500	1	LOWER DOOR HINGE
14	R58002520	1	LOWER HINGE PIN
15	R11401410	1	UPPER DOOR HINGE
16	R58002150	1	UPPER HINGE PIN
17	R58004050	2	NUT FOR UPPER DOOR HINGE
18	R70050100	6	GLASS SILICON SPACERS
19	R11401440	1	LAMP COVER

POS.	CODE	PIECES	DESCRIPTION
20	R71500150	1	GLASS LAMP
21	R70044200	1	LAMP GASKET
22	R11401450	1	GLASS HOLDER LAMP FLANGE
23	R65270450	1	LIGHT SOCKET
24	R65270020	1	LIGHT 20W 12V G4
25	R65260750	1	LAMPS CONTACT BLOCK
26	R69010260	1	DOOR LATCH 1 STEP
27	R61620132	1	PRONG FLANGE

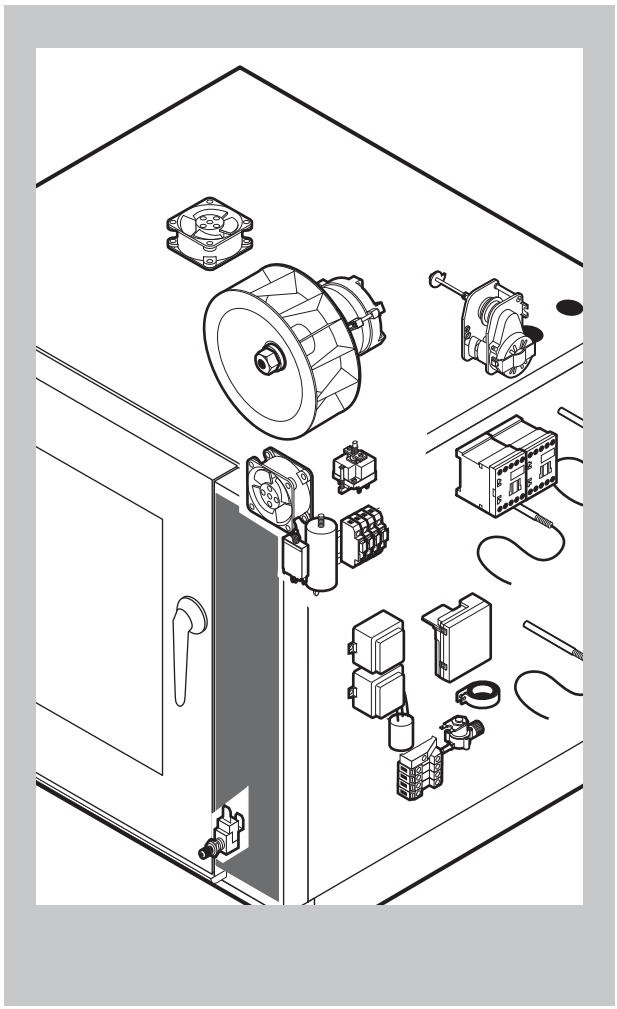

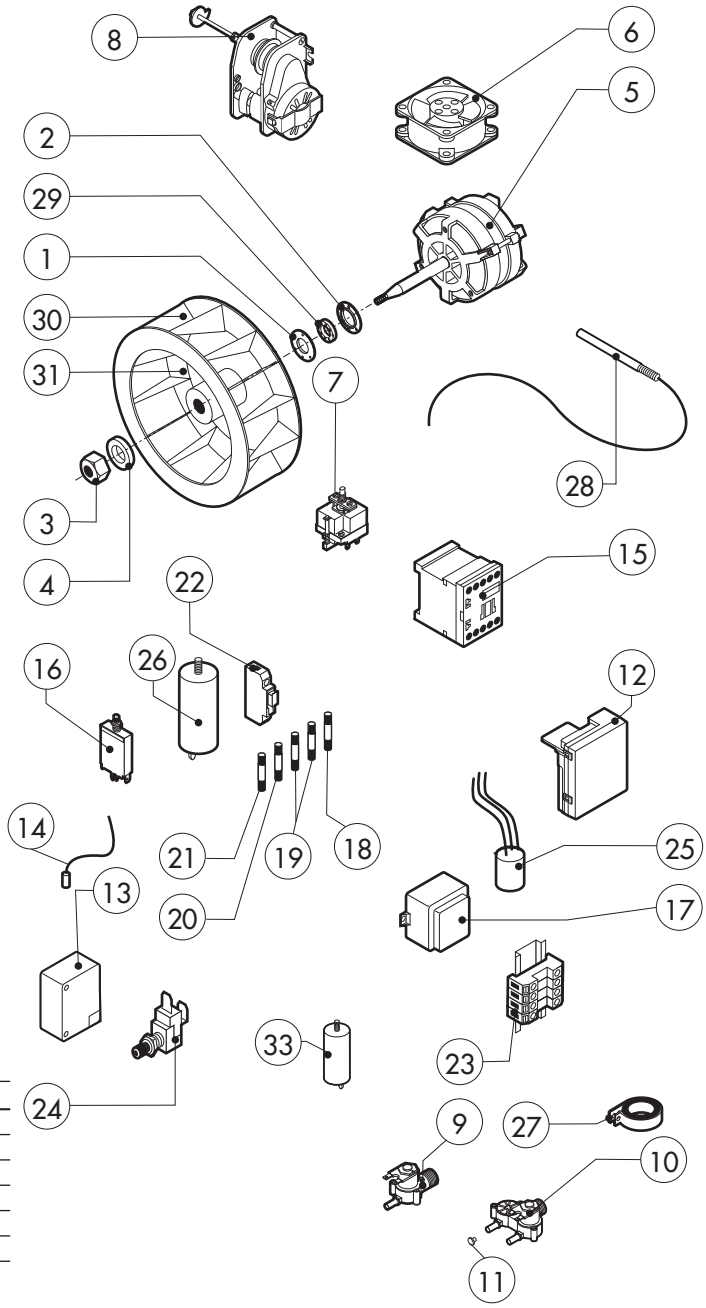

TWO SPEED FAN

POS.	CODE	PIECES	DESCRIPTION
5	*R65040431	1	MOTOR KW 025/005 2-4P 220-240V KIT
15	*R65140700	4	CONTACTOR DIL M9-01 4KW-20A
32	*R65160300	1	THERMIC PROTECTION T12-211S-0,8A

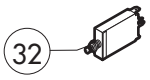

POS.	CODE	PIECES	DESCRIPTION
1	R58003860	1	MOTOR GASKET BRASS FLANGE
2	R58003870	1	MOTOR GASKET BRASS COUNTER FLANGE
3	R58004020	1	FAN SECURITY NUT M10 SX
4	R61400052	1	FAN WASHER Ø 21/10.5
5	*R65040421	1	MOTOR KW 025 2P 220-240V KIT
6	R65060050	2	COMPONENTS VENTILATION MOTOR Ø 120
7	R65070350	1	CHAMBER SAFETY THERMOSTAT
8	R65095000	1	DAMPER SYSTEM
9	R65110200	1	SOLENOID VALVE 220V 50HZ
10	R65110230	1	SOLENOID VALVE 220V 50HZ
11	R65110520	1	22 LT/H WATER FLOW REDUCER
12	R63060160	1	BURNER IGNITION PANEL
13	R65180270	1	IGNITION TRANSFORMER
14	R66605140	1	FLAME IGNITION CABLE/FLAME SENSOR CABLE
15	*R65140700	2	CONTACTOR DIL M9-01 4KW-20A
16	*R65160320	1	THERMIC PROTECTION T12-211S-2A
17	R65180420	2	TRANSFORMER 20VA
18	R65200200	1	FUSE 2A
19	R65200160	2	FUSE 1A
20	R65200320	1	FUSE 0.200A (T)
21	R65200086	1	FUSE 0.125A (T)

POS.	CODE	PIECES	DESCRIPTION
22	R65210020	5	FUSE CARRIER
23	R65220280	1	TERMINAL BOARD
24	R65260540	1	DOOR SWITCH
25	*R65280230	1	INTERFERENCE SUPPRESSOR
26	R65190180	1	CAPACITOR 10 µF
27	*R65280490	1	FERRITE FT35
28	R65320220	2	PROBE "K" 6X80 1,5ML.
29	R70020040	1	MOTOR GASKET
30	*R75400490	1	FAN Ø 220x78/12 50HZ P.D. KIT
31	R75400530	1	FAN Ø 220x78/8 60HZ P.D. KIT
33	R65190180	1	CAPACITOR 10 µF

*COMPONENT SUBMITTED TO CHANGEMENTS CAUSED BY TENSION DIFFERENT FROM THE STANDARD (AC 230V 50HZ)

SVG 071 P **tav. C**

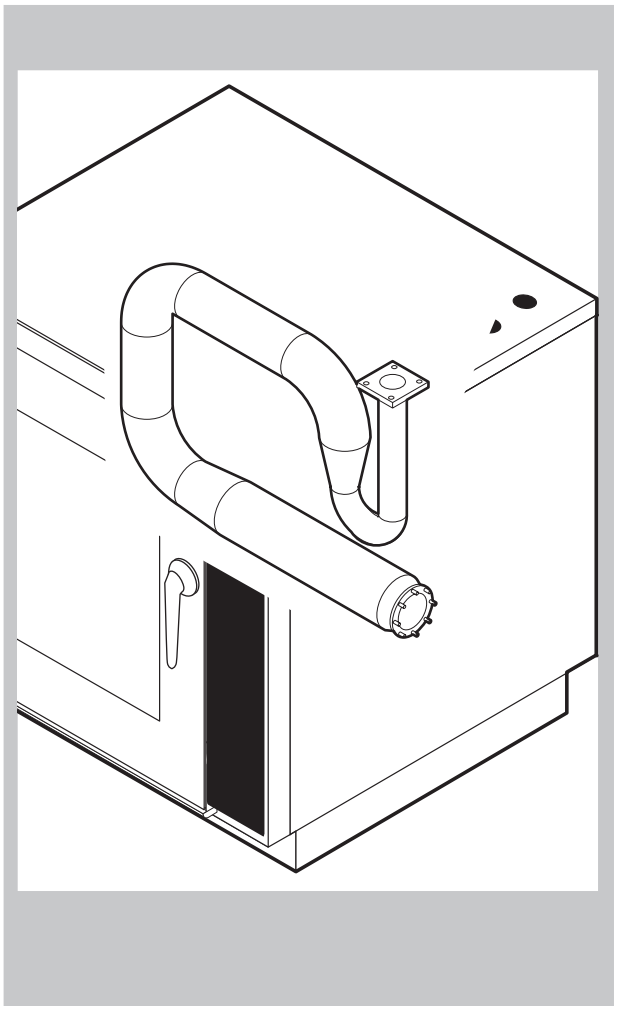

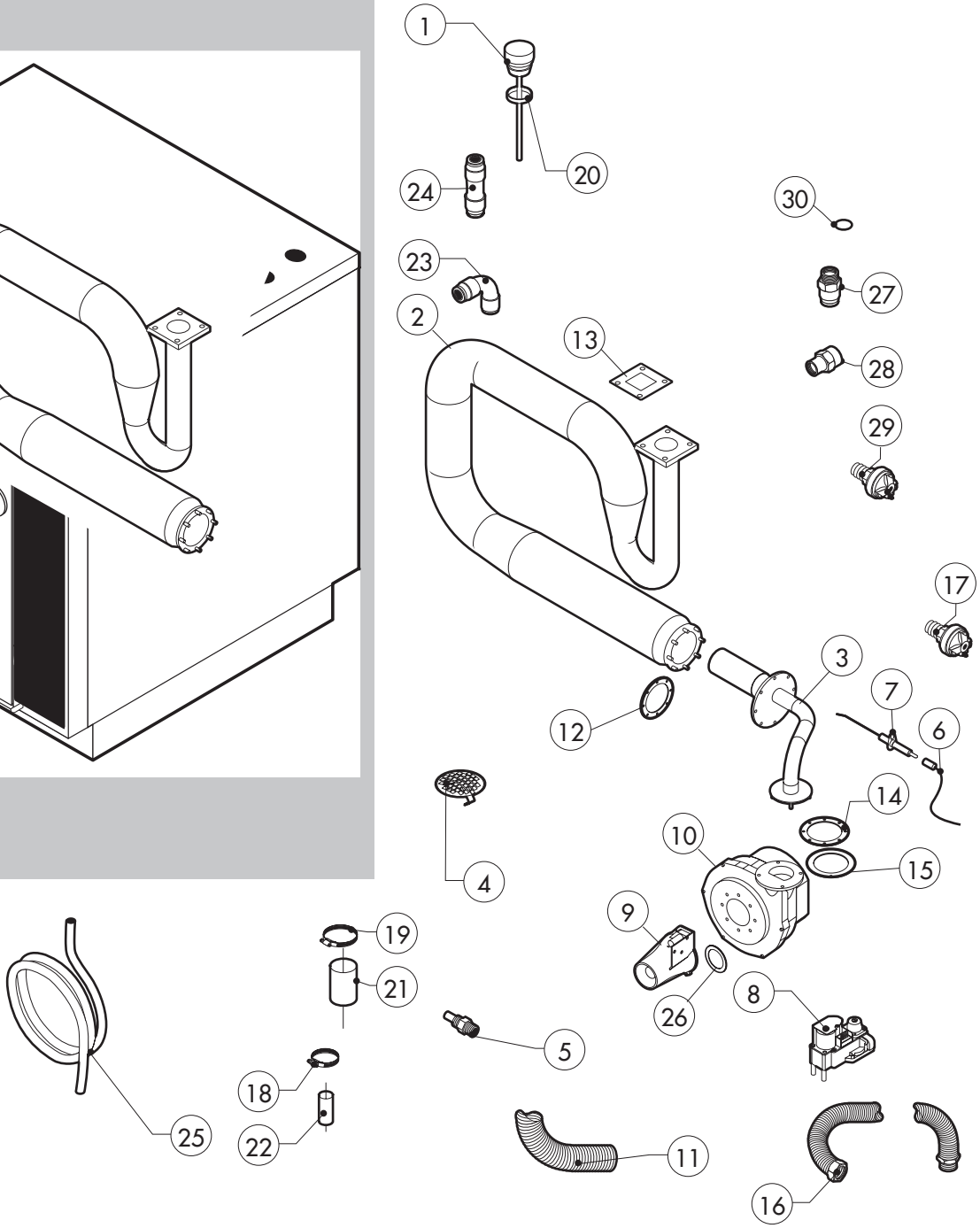

POS.	CODE	PIECES	DESCRIPTION
1	R10100140	1	DAMPER SYSTEM CAP
2	R18203080	1	HEAT EXCHANGER ACCESSORIES INCLUDED
3	R18211051	1	COOKING CABINET BURNER
4	R10201700	1	DRAIN FILTER
5	R58006130	1	STEAM QUENCHING NOZZLE Ø 1
6	R66605821	1	FLAME IGNITION CABLE/FLAME SENSOR CABLE
7	R63050130	3	IGNITOR
8	R63020170	1	GAS SOLENOID VALVE
9	R63120020	1	VENTURI TUBE
10	R65060360	1	GAS BURNER FAN MOTOR
11	R77700056	1 MT	AIR INLET FLEXIBLE PIPE
12	R63140070	2	BURNER/HEAT EXCHANGER GASKET
13	R63140010	2	BOILER/HEAT EXCHANGER GASKET
14	R63140050	2	BURNER/FAN MOTOR GASKET
15	R11430360	1	ORIFICE D.13
16	R62180122	1	GAS INLET FLEXIBLE PIPE
17	R63070010	1	GAS SAFETY PRESSURE SWITCH PG 901.61
18	R61630011	2	METAL CLAMPS 12-22/9
19	R61630021	2	METAL CLAMPS 30-45/9

POS.	CODE	PIECES	DESCRIPTION
20	R70060020	1	DAMPER SYSTEM CAP GASKET
21	R70060010	1	SILICON COUPLING Ø 30
22	R70060080	1	SILICON COUPLING Ø 13
23	R62090478	3	ELBOW MIDDLING PIPE FITTING D.10
24	R62090458	1	STRAIGHT MIDDLING PIPE FITTING D.10
25	R70070050	1	PE D.10 MM X7 WATER FLEXIBLE PIPE (3 MT LONG)
26	R58004170	1	ORIFICE
27	R62090508	1	10X1/4 STRAIGHT THREADED TERMINAL PIPE FITTING
28	R62030118	1	1/8"-1/4" FEMALE REDUCTION COUPLING
29	R63070050	1	WATER SAFETY PRESSURE SWITCH 1/8" 0,5-0,35 BAR
30	R70010050	1	GASKET

Serie New

EDIZIONE 0211

SVG 071 P

tav. D

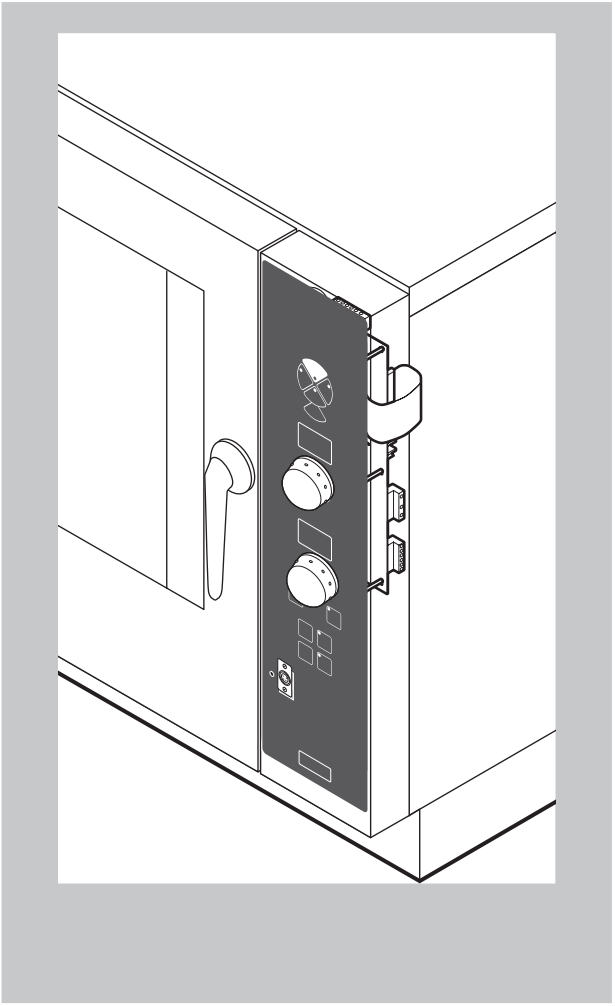

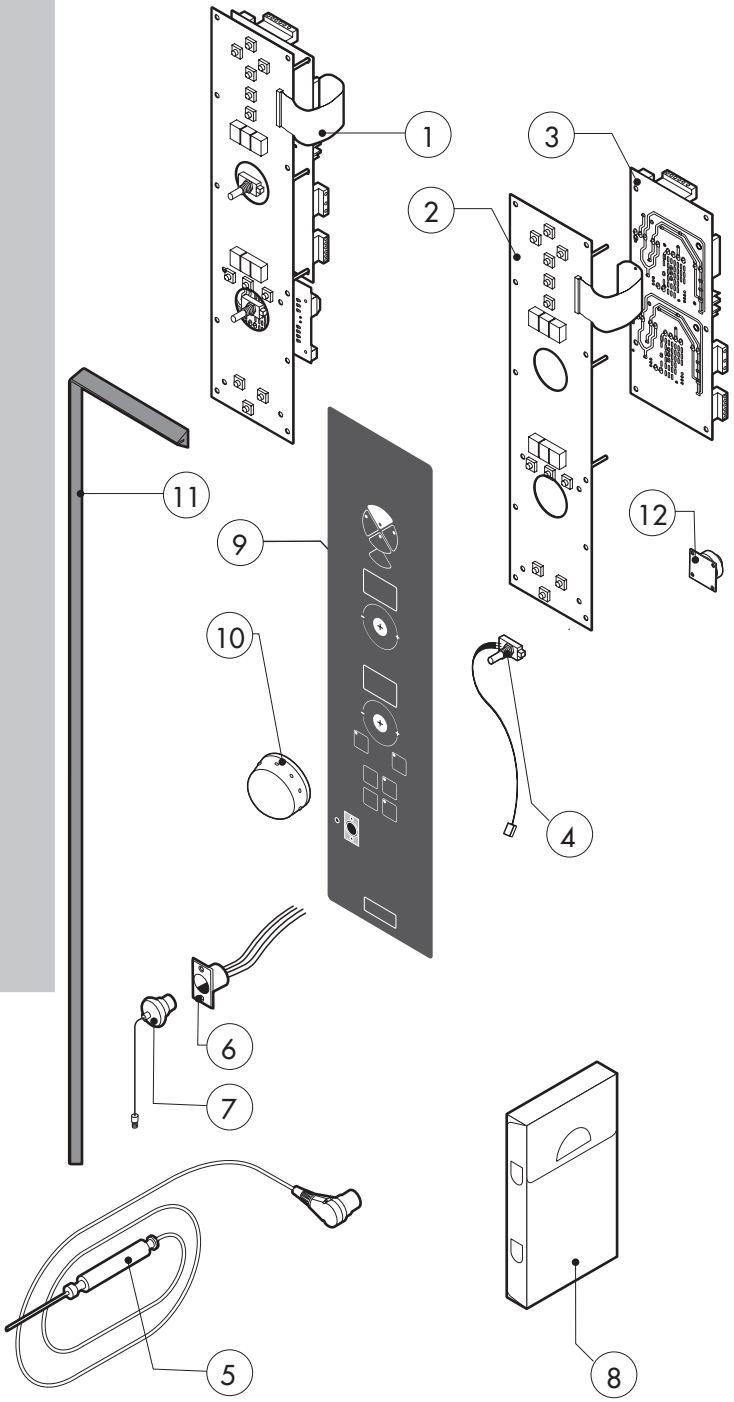

POS.	CODE	PIECES	DESCRIPTION
1	R65302151	1	CONTROL PANEL P.C. BOARD "P" MOD
2	R65302181	1	RELAY PC BOARD "P" MOD
3	R65302191	1	MAIN PC BOARD "P" MOD
4	R65301940	2	FRONT PC BOARD ENCODER
5	R65321120	1	CORE TEMPERATURE PROBE
6	R65320920	1	CORE TEMPERATURE PROBE FEMALE CONNECTOR
7	R65321020	1	COVER FOR FEMALE CONNECTOR
8	R86020420	1	CORE TEMPERATURE PROBE BOX
9	-	1	PLATE "P"
10	R69030260	2	KNOB
11	R70044260	1	CONTROL PANEL GASKET
12	R65301960	1	PC BOARD BUZZER

POS.	CODE	PIECES	DESCRIPTION

Serie New

EDIZIONE 0211

SVG 071 P

tav. E

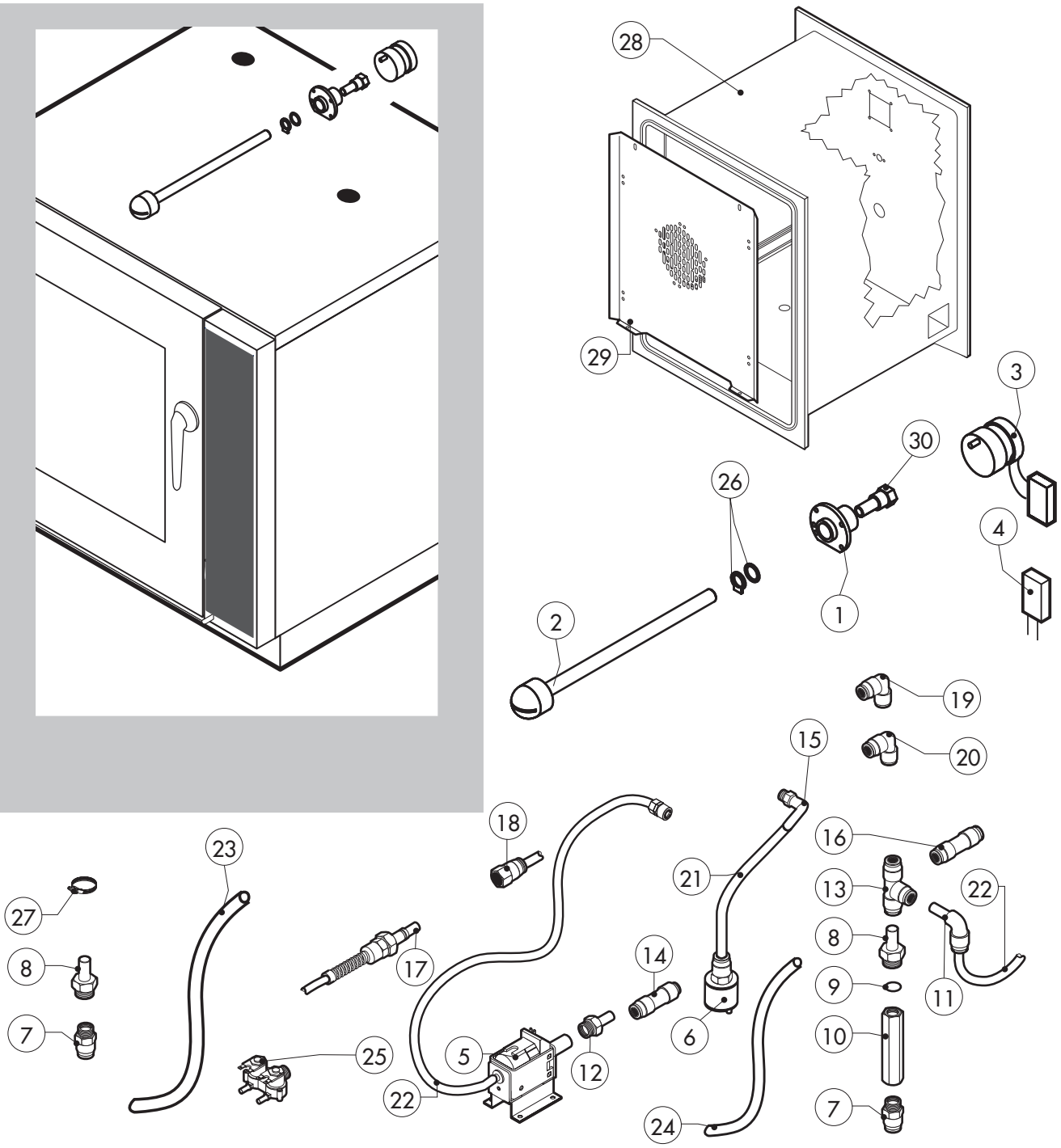

POS.	CODE	PIECES	DESCRIPTION
1	R58007020	1	WASHING SYSTEM FLANGE
2	R58007040	1	WASHING SYSTEM INNER ASSEMBLY
3	R65090250	1	WASHING GEARED MOTORS WITH CAPACITOR
4	R65190230	1	CAPACITOR 0,27 □F
5	R65110600	1	DETRGENT PUMP
6	R65110650	1	BOTTOM FILTER
7	R62090508	1	10X1/4 STRAIGHT THREADED TERMINAL PIPE FITTING
8	R62090518	5	10X1/4 END SIDE PIPE FITTING (WITH TANG)
9	R70010050	6	OR GASKETS
10	R65110640	2	ANTI-BACK FLOW
11	R62090528	3	ELBOW PIPE FITTING (WITH TANG) 10 X 10
12	R62090608	1	8X1/8 END SIDE PIPE FITTING (WITH TANG)
13	R62090468	1	"T" MIDDLING PIPE FITTING D.10
14	R62090618	1	10-8 REDUCTION PIPE FITTING
15	R62090648	1	ELBOW PIPE FITTING
16	R62090458	1	STRAIGHT MIDDLING PIPE FITTING D.10
17	R62090482	1	RAPID MALE PIPE FITTING
18	R62090538	1	1/4" FEMALE STRAIGHT PIPE FITTING FOR D.8X6 PIPE
19	R62090633	1	ELBOW PIPE FITTING BRASS D.10

POS.	CODE	PIECES	DESCRIPTION
20	R62090663	1	ELBOW PIPE FITTING BRASS D.10x1/4"
21	R70070100	1	PE D.8 MM X 6 DETERGENT FLEXIBLE PIPE
22	R70070070	1	PE D.10 MM X7 WATER FLEXIBLE PIPE (3 MT LONG)
23	R70070080	1	PE D.23 MM X13 FLEXIBLE PIPE (1 MT LONG)
24	R70070090	1	PE D.12 MM X7 SILICONE PIPE (1 MT LONG)
25	R65110210	1	SOLENOID VALVE 220V 50HZ
26	R70045120	1	GASKETS KIT
27	R61630011	2	METAL CLAMPS 12-22/9
28	R18210441	1	COOKING CABINET ASSEMBLY
29	R18422070	1	FAN GUARD PANEL ASSEMBLY
30	R58007000	1	ROTATING PIVOT