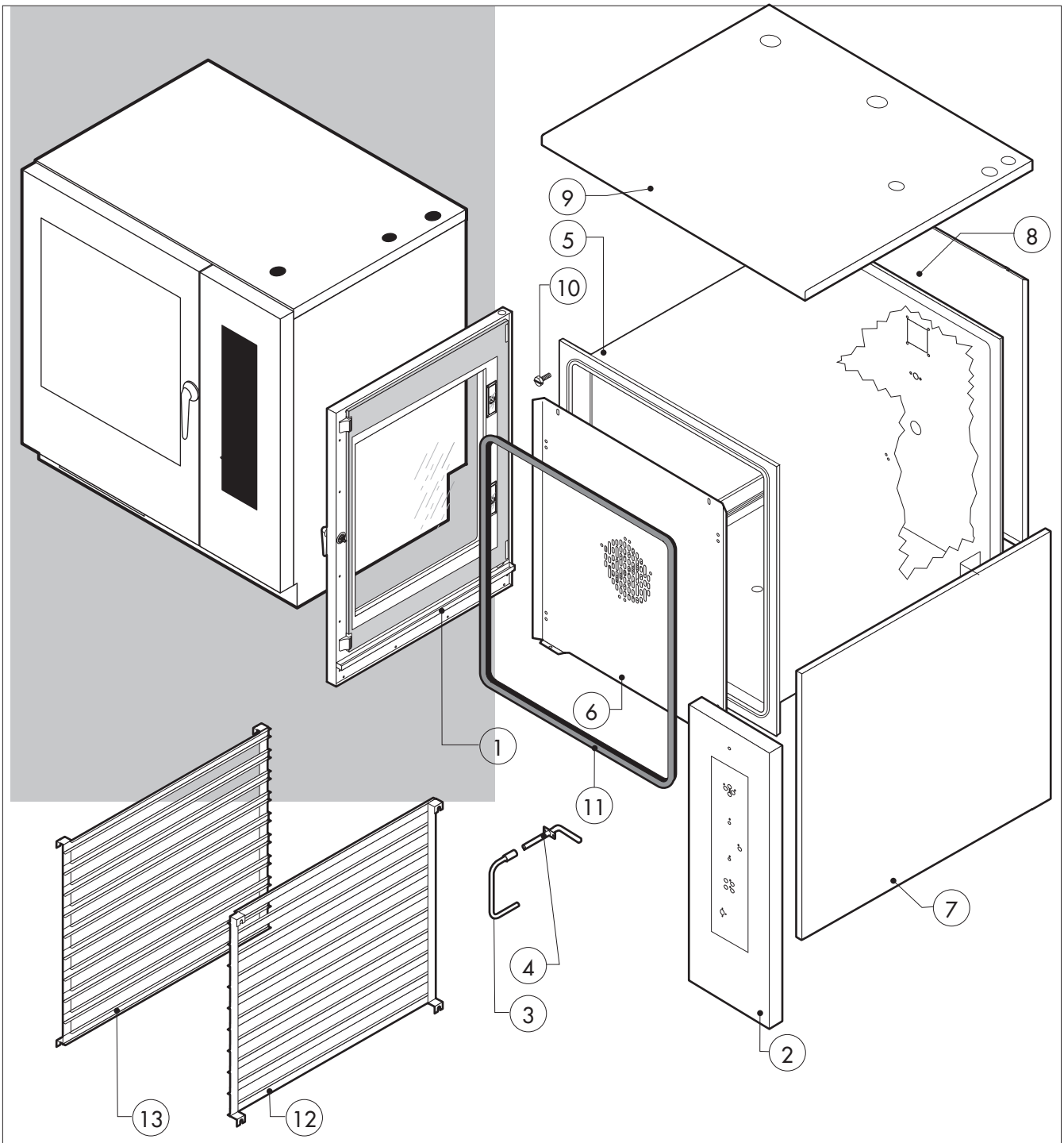


| POS. | CODE | PIECES | DESCRIPTION |
|---|---|---|---|
| 1 | R18100190 | 1 | DOOR ASSEMBLY |
| 2 | R18203360 | 1 | CONTROL PANEL |
| 3 | R11201990 | 1 | SPRITZER EXTENSION |
| 4 | R11202270 | 1 | SPRITZER UNION |
| 5 | R18210380 | 1 | COOKING CABINET ASSEMBLY |
| 6 | R18421250 | 1 | FAN GUARD PANEL ASSEMBLY |
| 7 | R18421030 | 1 | SIDE PANEL |
| 8 | R18421050 | 1 | REAR PANEL |
| 9 | R18422200 | 1 | COVER PANEL |
| 10 | R58006400 | 4 | FAN GUARD FASTENING SCREW |
| 11 | R70044840 | 1 | FRONT GASKET |
| 12 | R18421410 | 1 | REMOVABLE RACK DX |
| 13 | R18421420 | 1 | REMOVABLE RACK SX |

| POS. | CODE | PIECES | DESCRIPTION |
|---|---|---|---|

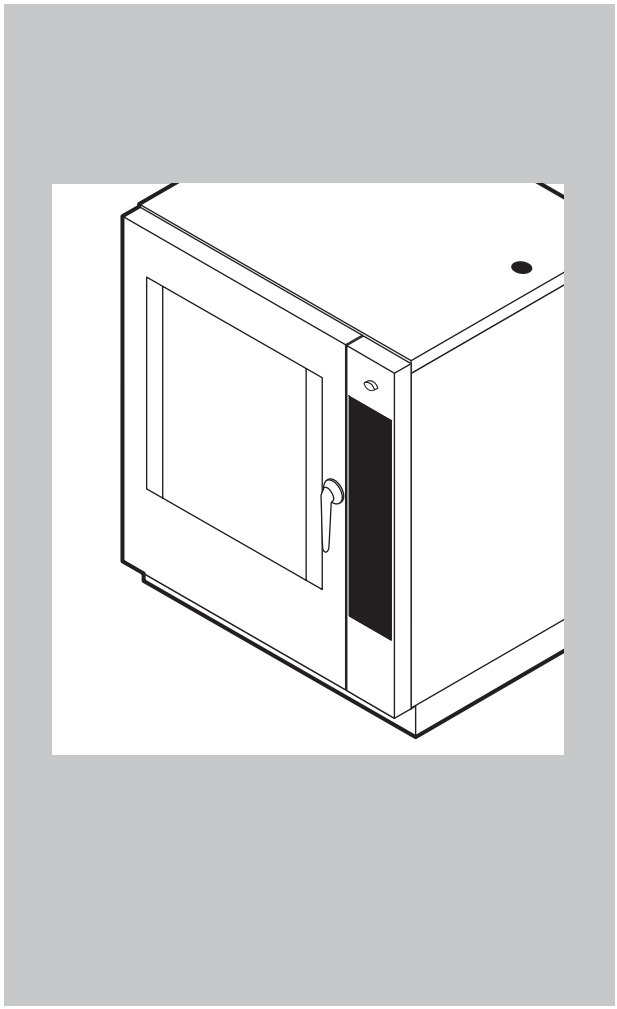

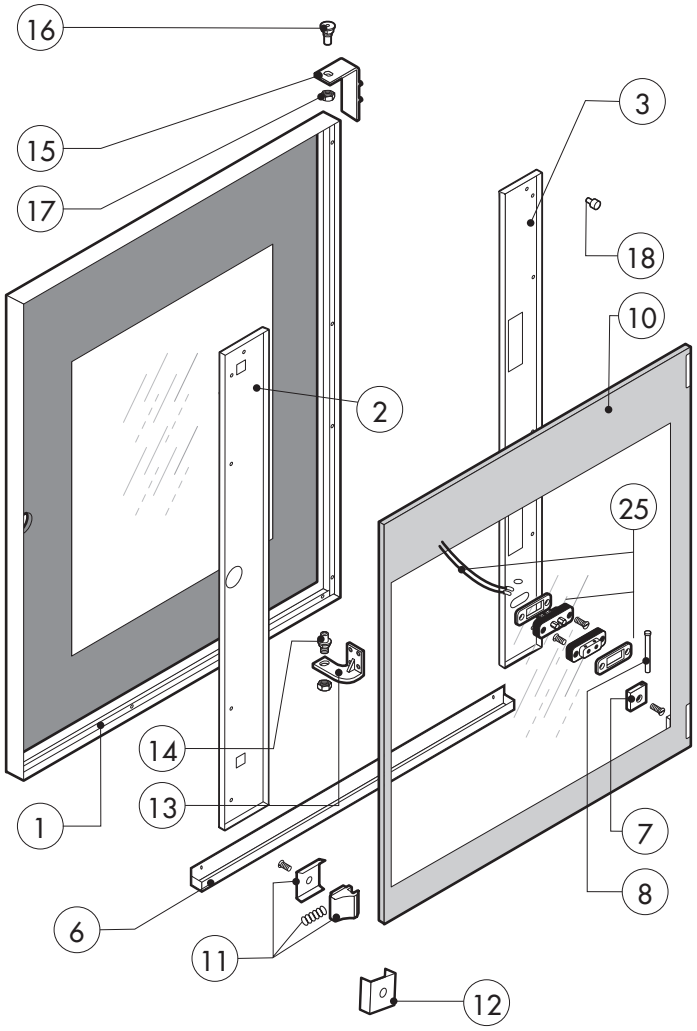


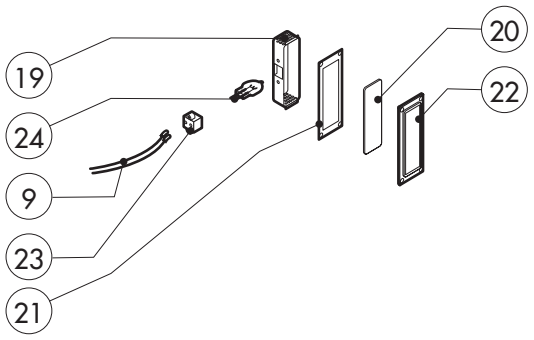


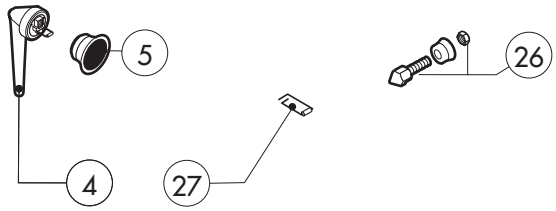


| POS. | CODE | PIECES | DESCRIPTION |
|---|---|---|---|
| 1 | R18203280 | 1 | DOOR |
| 2 | R18420780 | 1 | RIGHT DOOR POST |
| 3 | R18420790 | 1 | LEFT DOOR POST |
| 4 | R69010210 | 1 | DOORHANDLE |
| 5 | R69010630 | 1 | DOORHANDLE COVER |
| 6 | R18420820 | 1 | DOOR BASIN |
| 7 | R58001760 | 2 | INNER GLASS SOLID HINGE |
| 8 | R58001770 | 2 | INNER GLASS HINGE PIN |
| 9 | R66110320 | 1 | DOOR LAMPS CABLE SET |
| 10 | R71201530 | 1 | OUTER DOOR GLASS |
| 11 | R58001780 | 2 | INNER GLASS CATCH KIT |
| 12 | R11401350 | 2 | OUTER DOOR GLASS FLANGE |
| 13 | R18404500 | 1 | LOWER DOOR HINGE |
| 14 | R58002520 | 1 | LOWER HINGE PIN |
| 15 | R11401410 | 1 | UPPER DOOR HINGE |
| 16 | R58002150 | 1 | UPPER HINGE PIN |
| 17 | R58004050 | 2 | NUT FOR UPPER DOOR HINGE |
| 18 | R70050100 | 6 | GLASS SILICON SPACERS |
| 19 | R11401440 | 1 | LAMP COVER |

| POS. | CODE | PIECES | DESCRIPTION |
|---|---|---|---|
| 20 | R71500150 | 1 | GLASS LAMP |
| 21 | R70044200 | 1 | LAMP GASKET |
| 22 | R11401450 | 1 | GLASS HOLDER LAMP FLANGE |
| 23 | R65270450 | 1 | LIGHT SOCKET |
| 24 | R65270020 | 1 | LIGHT 20W 12V G4 |
| 25 | R65260750 | 1 | LAMPS CONTACT BLOCK |
| 26 | R69010260 | 1 | DOOR LATCH 1 STEP |
| 27 | R61620132 | 1 | PRONG FLANGE |

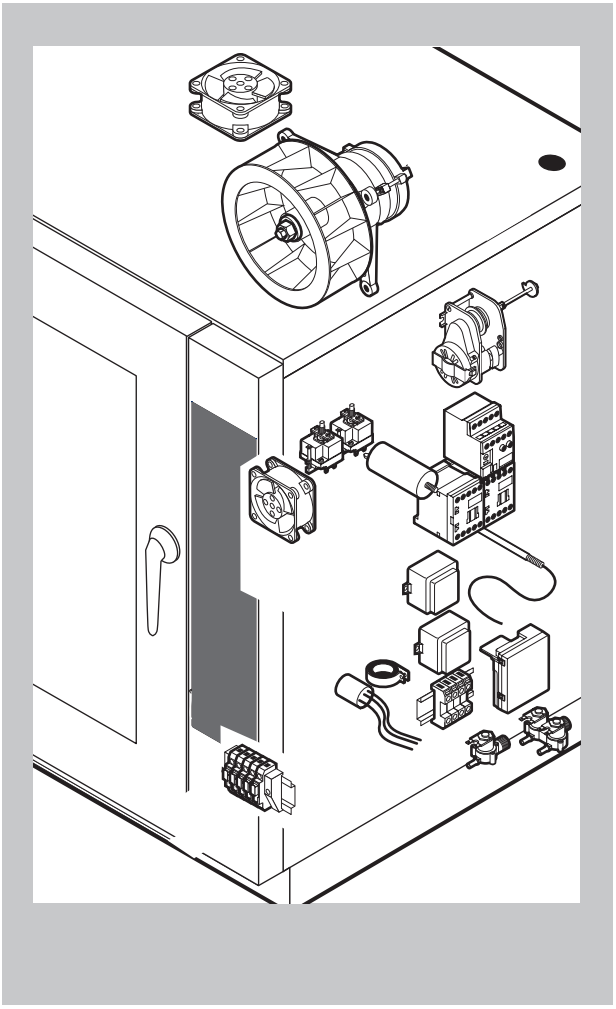

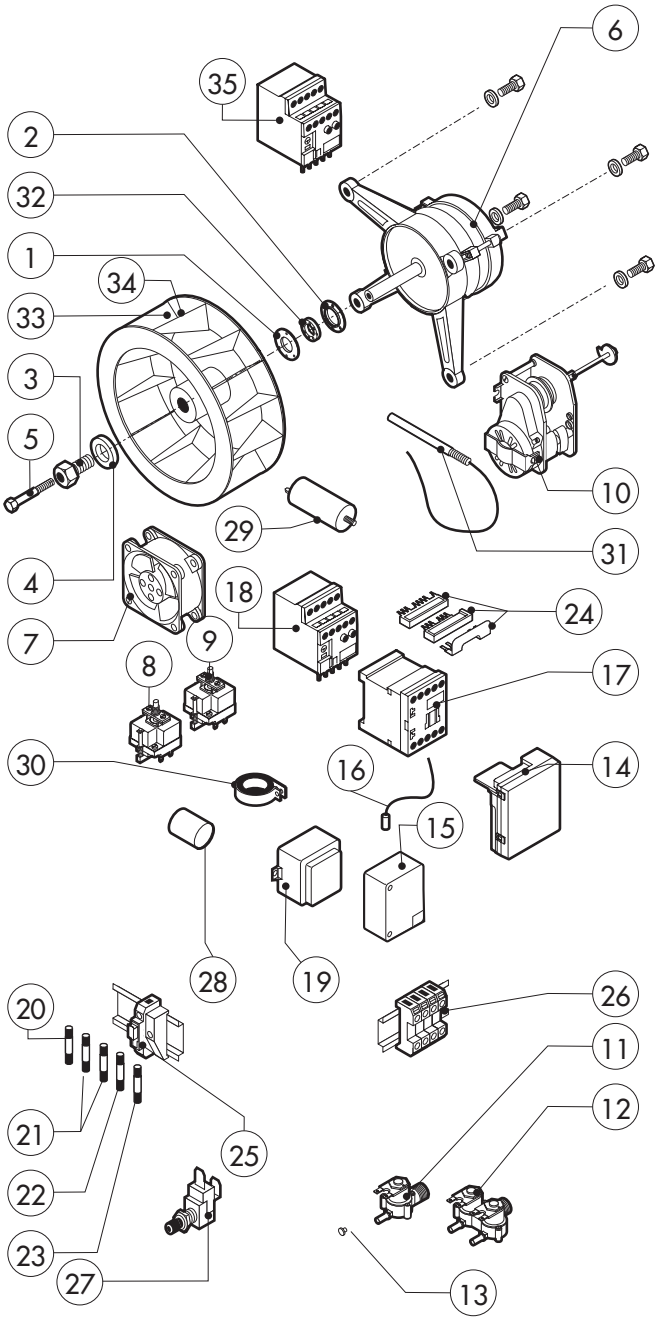


TWO SPEED FAN

| POS. | CODE | PIECES | DESCRIPTION |
|---|---|---|---|
| 6 | *R65040540 | 1 | MOTOR KW 055/015 4-6P 240V |
| 17 | *R65140700 | 4 | CONTACTOR DIL M9-01 4KW-20A |
| 35 | *R65160770 | 1 | THERMIC PROTECTION ZB12-2,4 (1,6-2,4) |
| | | | |
| | | | |
| | | | |
| | | | |

| POS. | CODE | PIECES | DESCRIPTION |
|---|---|---|---|
| 1 | R58003840 | 1 | MOTOR GASKET BRASS FLANGE |
| 2 | R58003850 | 1 | MOTOR GASKET BRASS COUNTER FLANGE |
| 3 | R58004000 | 1 | FAN SCREW M12x1.5 SX |
| 4 | R58004010 | 1 | FAN WASHER Ø 30/12.5 |
| 5 | R61020562 | 1 | FAN SCREW TE A2 M6x55 |
| 6 | *R65040550 | 1 | MOTOR KW 055 F1 4P 200-240V KIT |
| 7 | R65060050 | 2 | COMPONENTS VENTILATION MOTOR Ø 120 |
| 8 | R65070350 | 1 | CHAMBER SAFETY THERMOSTAT |
| 9 | R65070081 | 1 | STEAM GENERATOR SAFETY THERMOSTAT |
| 10 | R65095000 | 1 | DAMPER SYSTEM |
| 11 | R65110200 | 1 | SOLENOID VALVE 220V 50HZ |
| 12 | R65110210 | 1 | SOLENOID VALVE 220V 50HZ WITH FLOW REDUCER |
| 13 | R65110520 | 1 | 22 LT/H WATER FLOW REDUCER |
| 14 | R63060160 | 2 | BURNER IGNITION PANEL |
| 15 | R65180270 | 2 | IGNITION TRANSFORMER |
| 16 | R66605140 | 2 | FLAME IGNITION CABLE/FLAME SENSOR CABLE |
| 17 | *R65140700 | 2 | CONTACTOR DIL M9-01 4KW-20A |
| 18 | *R65160780 | 1 | THERMIC PROTECTION ZB12-4 |
| 19 | R65180420 | 2 | TRANSFORMER 20VA |
| 20 | R65200200 | 1 | FUSE 2A |
| 21 | R65200160 | 2 | FUSE 1A |

| POS. | CODE | PIECES | DESCRIPTION |
|---|---|---|---|
| 22 | R65200350 | 1 | FUSE 0.200A (T) |
| 23 | R65200086 | 1 | FUSE 0.125A (T) |
| 24 | R65140750 | 1 | INVERSION KIT FOR CONTACTOR 4KW |
| 25 | R65210020 | 3 | FUSE CARRIER |
| 26 | R65220300 | 1 | TERMINAL BOARD |
| 27 | R65260540 | 1 | DOOR SWITCH |
| 28 | *R65280200 | 3 | INTERFERENCE SUPPRESSOR |
| 29 | *R65190050 | 1 | CAPACITOR 20 µF |
| 30 | *R65280490 | 1 | FERRITE FT35 |
| 31 | R65320220 | 3 | PROBE "K" 6X80 1,5ML. |
| 32 | R70020050 | 1 | MOTOR GASKET |
| 33 | *R75400440 | 1 | FAN Ø 350x114/12 50HZ P.D. KIT |
| 34 | R75400470 | 1 | FAN Ø 350x114/12 60HZ P.D. KIT |
| | | | |
| | | | |
| | | | |
| | | | |
| | | | |
| | | | |
| | | | |
| | | | |

*COMPONENT SUBMITTED TO CHANGEMENTS CAUSED BY TENSION DIFFERENT FROM THE STANDARD (AC 230V 50HZ)

**EDIZIONE 1210**

# SMG A20 S tav. C

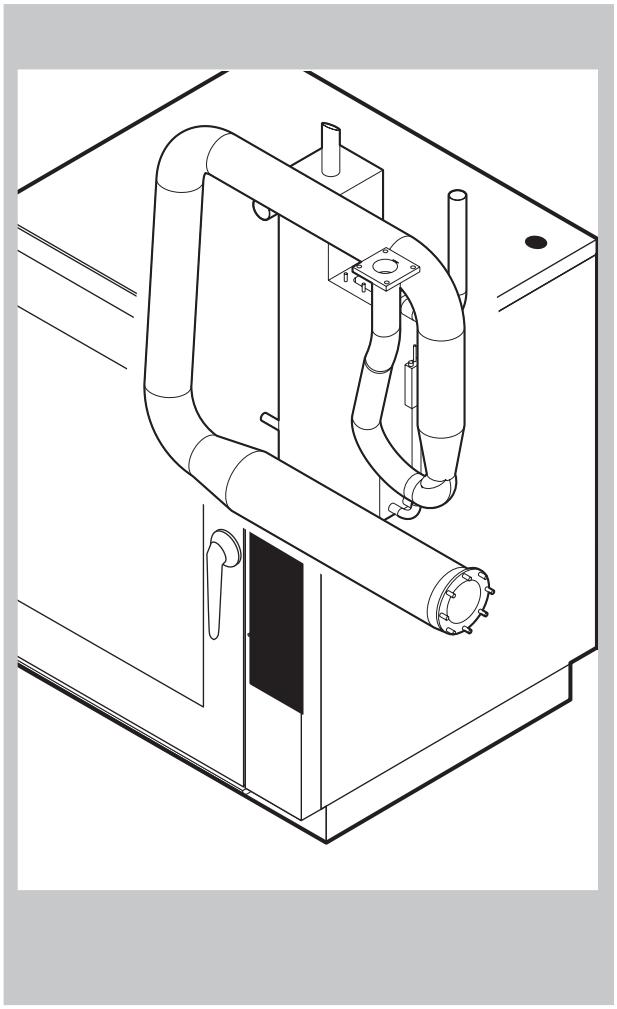

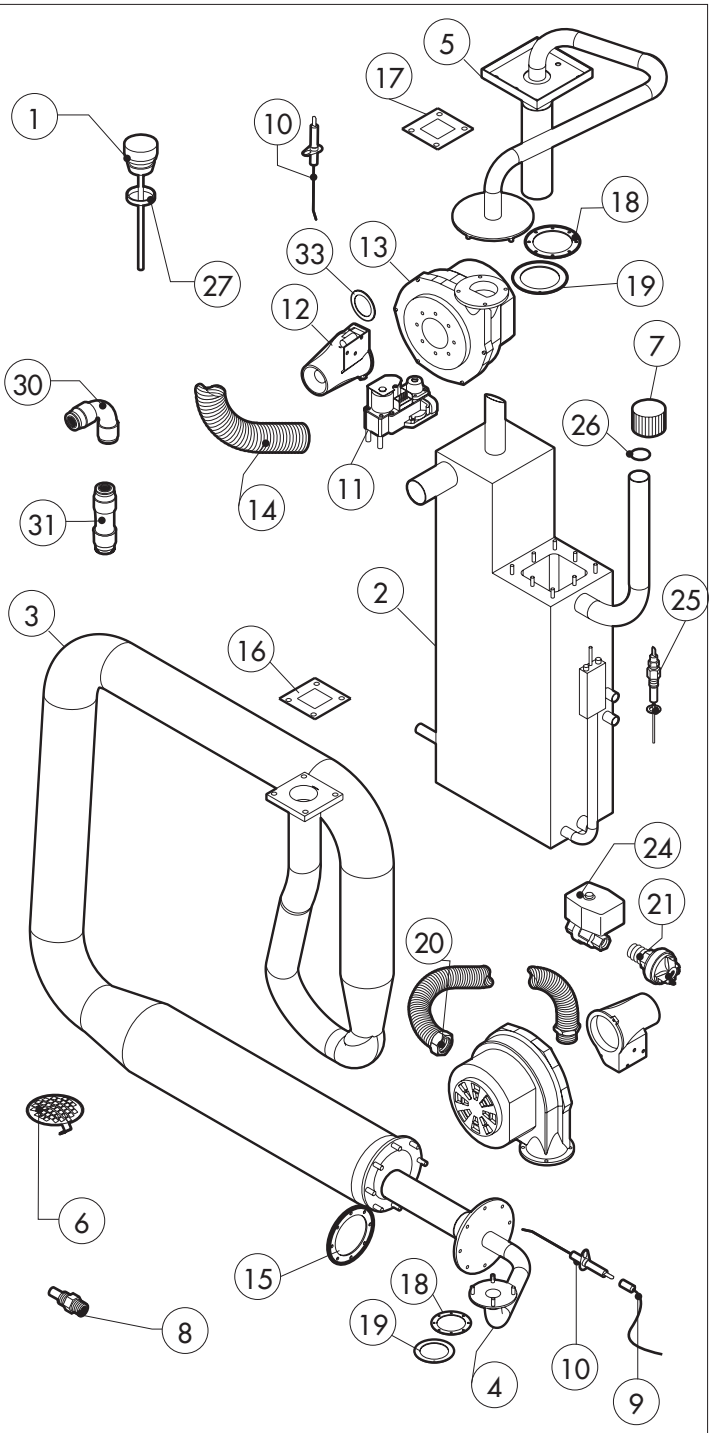


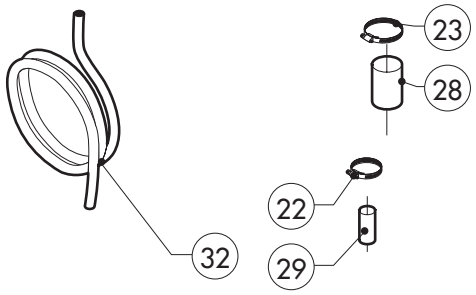


| POS. | CODE | PIECES | DESCRIPTION |
|---|---|---|---|
| 1 | R10100140 | 1 | DAMPER SYSTEM CAP |
| 2 | R18210561 | 1 | STEAM GENERATOR ASSEMBLY |
| 3 | R18203100 | 1 | HEAT EXCHANGER ACCESSORIES INCLUDED |
| 4 | R18210571 | 1 | COOKING CABINET BURNER |
| 5 | R18210581 | 1 | STEAM GENERATOR BURNER |
| 6 | R10201700 | 1 | DRAIN FILTER |
| 7 | R69150110 | 1 | STEAM GENERATOR DESCALING CAP 1"1/4 F |
| 8 | R58006130 | 1 | STEAM QUENCHING NOZZLE Ø 1 |
| 9 | R66605821 | 2 | FLAME IGNITION CABLE/FLAME SENSOR CABLE |
| 10 | R63050130 | 6 | IGNITOR |
| 11 | R63020170 | 2 | GAS SOLENOID VALVE |
| 12 | R63120040 | 2 | VENTURI TUBE |
| 13 | R65060360 | 2 | GAS BURNER FAN MOTOR |
| 14 | R77700056 | 2 MT | AIR INLET FLEXIBLE PIPE |
| 15 | R63140080 | 2 | BURNER/HEAT EXCHANGER GASKET |
| 16 | R63140010 | 2 | HEAT EXCHANGER GASKET |
| 17 | R63140060 | 1 | BOILER/BURNER EXCHANGER GASKET |
| 18 | R63140050 | 4 | BURNER/FAN MOTOR GASKET |
| 19 | R11430340 | 2 | ORIFICE D.22 |

| POS. | CODE | PIECES | DESCRIPTION |
|---|---|---|---|
| 20 | R62180082 | 2 | GAS INLET FLEXIBLE PIPE |
| 21 | R63070010 | 1 | GAS SAFETY PRESSURE SWITCH PG 901.61 |
| 22 | R61630011 | 2 | METAL CLAMPS 12-22/9 |
| 23 | R61630021 | 2 | METAL CLAMPS 30-45/9 |
| 24 | R65110560 | 1 | STEAM GENERATOR DRAIN MOTORIZED VALVE |
| 25 | R65320010 | 2 | STEAM GENERATOR LEVEL PROBE |
| 26 | R70050140 | 1 | STEAM GENERATOR CAP GASKET |
| 27 | R70060020 | 1 | DAMPER SYSTEM CAP GASKET |
| 28 | R70060010 | 1 | SILICON COUPLING Ø 30 |
| 29 | R70060080 | 1 | SILICON COUPLING Ø 13 |
| 30 | R62090478 | 5 | ELBOW MIDDLING PIPE FITTING D.10 |
| 31 | R62090458 | 1 | STRAIGHT MIDDLING PIPE FITTING D.10 |
| 32 | R70070050 | 1 | PE D.10 MM X7 WATER FLEXIBLE PIPE (3 MT LONG) |
| 33 | R58004200 | 2 | ORIFICE |

*COMPONENT SUBMITTED TO CHANGEMENTS CAUSED BY TENSION DIFFERENT FROM THE STANDARD (AC 230V 50HZ)

**EDIZIONE 1210**

# SMG A20 S tav. D

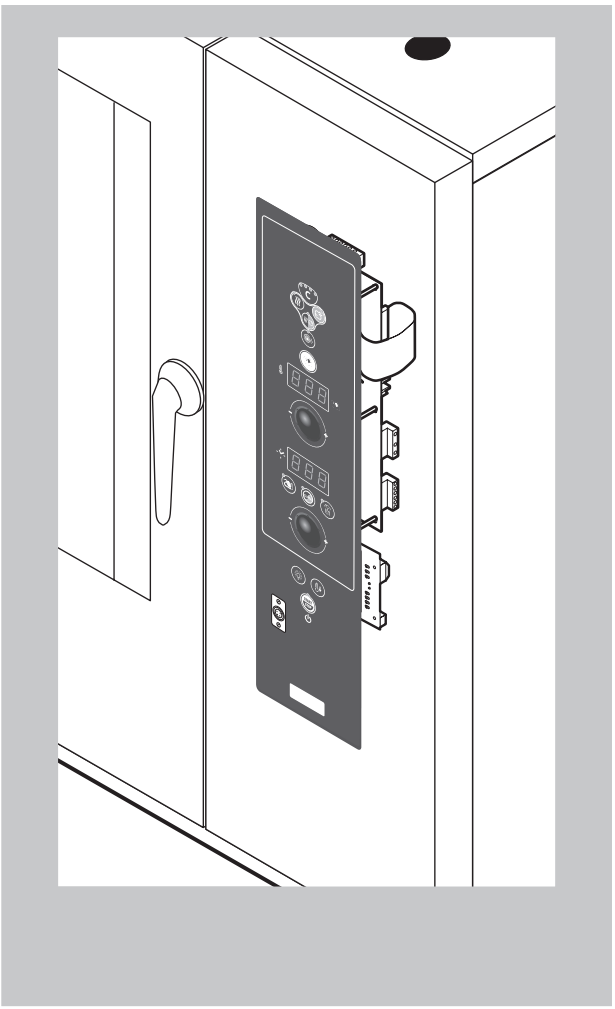

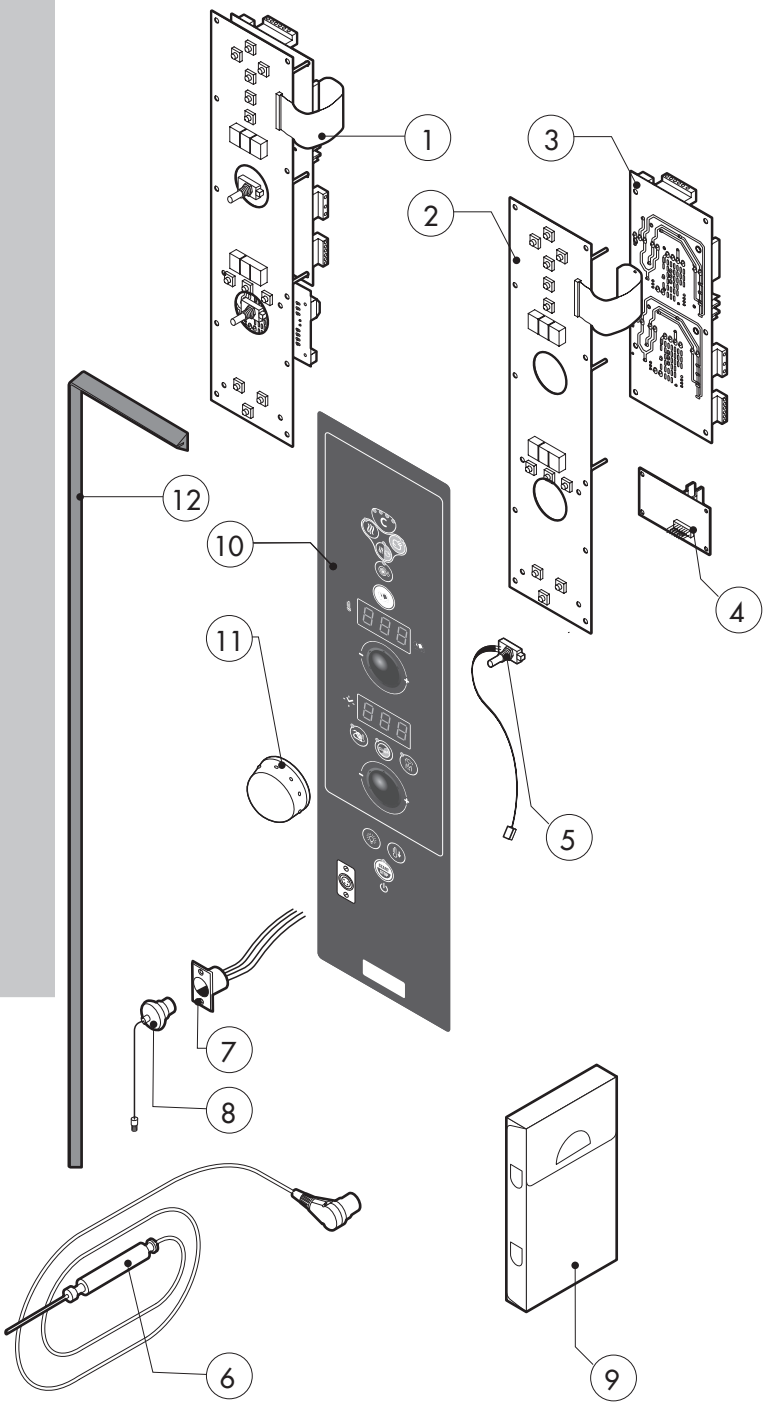


| POS. | CODE | PIECES | DESCRIPTION |
|---|---|---|---|
| 1 | R65302110 | 1 | CONTROL PANEL P.C. BOARD "S" MOD |
| 2 | R65302240 | 1 | RELAY PC BOARD "S" MOD |
| 3 | R65302250 | 1 | MAIN PC BOARD "S" MOD |
| 4 | R65301950 | 1 | BOILER CONTROL PC BOARD |
| 5 | R65301940 | 2 | FRONT PC BOARD ENCODER |
| 6 | R65321120 | 1 | CORE TEMPERATURE PROBE |
| 7 | R65320920 | 1 | CORE TEMPERATURE PROBE FEMALE CONNECTOR |
| 8 | R65321020 | 1 | COVER FOR FEMALE CONNECTOR |
| 9 | R86020420 | 1 | CORE TEMPERATURE PROBE BOX |
| 10 | - | 1 | PLATE "S" |
| 11 | R69030280 | 2 | KNOB |
| 12 | R70044260 | 1 | CONTROL PANEL GASKET |

| POS. | CODE | PIECES | DESCRIPTION |
|---|---|---|---|

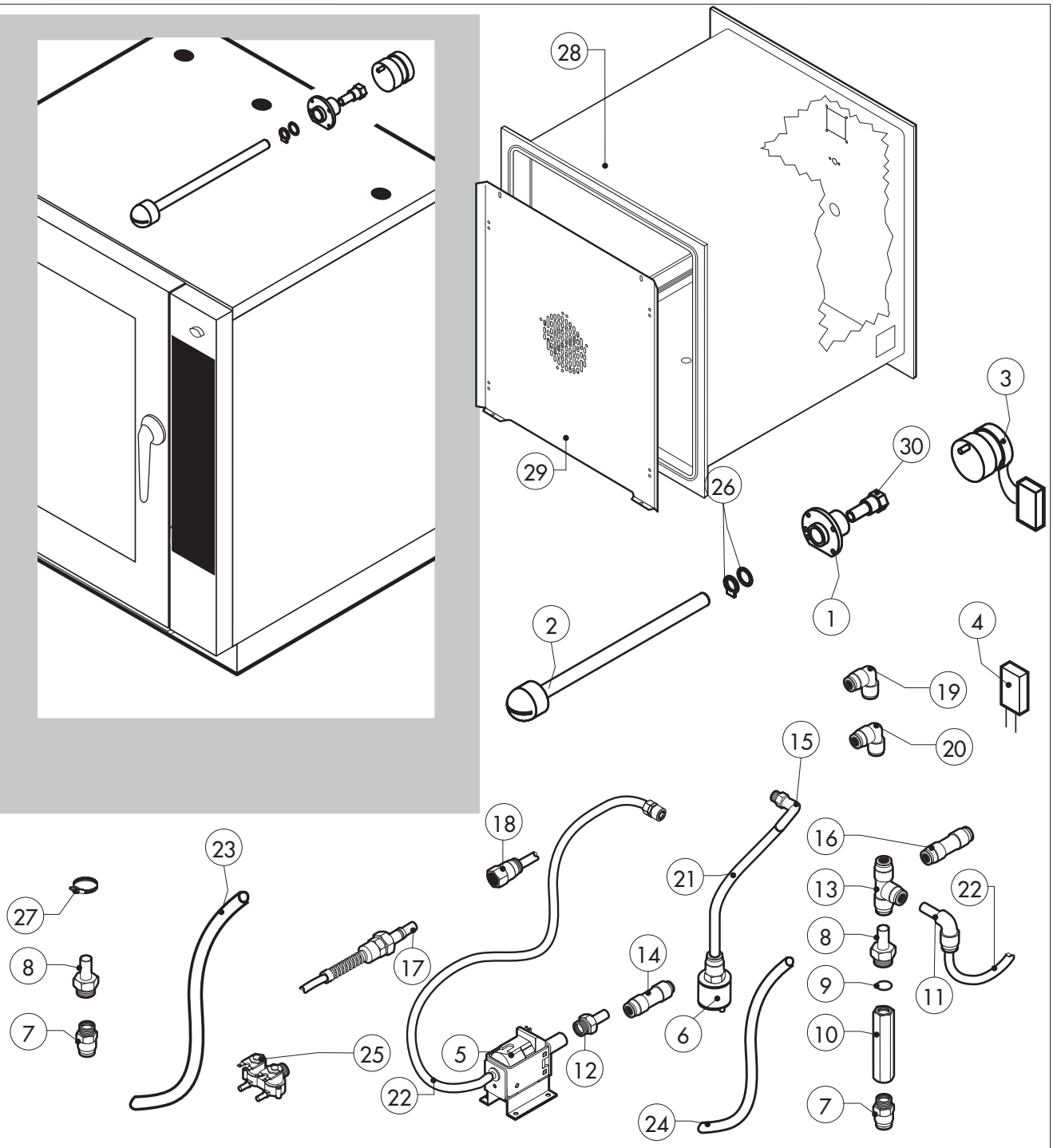


| POS. | CODE | PIECES | DESCRIPTION |
|---|---|---|---|
| 1 | R58007020 | 1 | WASHING SYSTEM FLANGE |
| 2 | R58007040 | 1 | WASHING SYSTEM INNER ASSEMBLY |
| 3 | R65090250 | 1 | WASHING GEARED MOTORS WITH CAPACITOR |
| 4 | R65190230 | 1 | CAPACITOR 0,27 µF |
| 5 | R65110600 | 1 | DETRGENT PUMP |
| 6 | R65110650 | 1 | BOTTOM FILTER |
| 7 | R62090508 | 1 | 10X1/4 STRAIGHT THREADED TERMINAL PIPE FITTING |
| 8 | R62090518 | 5 | 10X1/4 END SIDE PIPE FITTING (WITH TANG) |
| 9 | R70010050 | 6 | OR GASKETS |
| 10 | R65110640 | 2 | ANTI-BACK FLOW |
| 11 | R62090528 | 3 | ELBOW PIPE FITTING (WITH TANG) 10 X 10 |
| 12 | R62090608 | 1 | 8X1/8 END SIDE PIPE FITTING (WITH TANG) |
| 13 | R62090468 | 1 | "T" MIDDLING PIPE FITTING D.10 |
| 14 | R62090618 | 1 | 10-8 REDUCTION PIPE FITTING |
| 15 | R62090648 | 1 | ELBOW PIPE FITTING |
| 16 | R62090458 | 1 | STRAIGHT MIDDLING PIPE FITTING D.10 |
| 17 | R62090482 | 1 | RAPID MALE PIPE FITTING |
| 18 | R62090538 | 1 | 1/4" FEMALE STRAIGHT PIPE FITTING FOR D.8X6 PIPE |
| 19 | R62090633 | 1 | ELBOW PIPE FITTING BRASS D.10 |

| POS. | CODE | PIECES | DESCRIPTION |
|---|---|---|---|
| 20 | R62090663 | 1 | ELBOW PIPE FITTING BRASS D.10x1/4" |
| 21 | R70070100 | 1 | PE D.8 MM X 6 DETERGENT FLEXIBLE PIPE |
| 22 | R70070070 | 1 | PE D.10 MM X7 WATER FLEXIBLE PIPE (3 MT LONG) |
| 23 | R70070080 | 1 | PE D.23 MM X13 FLEXIBLE PIPE (1 MT LONG) |
| 24 | R70070090 | 1 | PE D.12 MM X7 SILICONE PIPE (1 MT LONG) |
| 25 | R65110210 | 1 | SOLENOID VALVE 220V 50HZ |
| 26 | R70045120 | 1 | GASKETS KIT |
| 27 | R61630011 | 2 | METAL CLAMPS 12-22/9 |
| 28 | R18210400 | 1 | COOKING CABINET ASSEMBLY |
| 29 | R18422110 | 1 | FAN GUARD PANEL ASSEMBLY |
| 30 | R58007000 | 1 | ROTATING PIVOT |