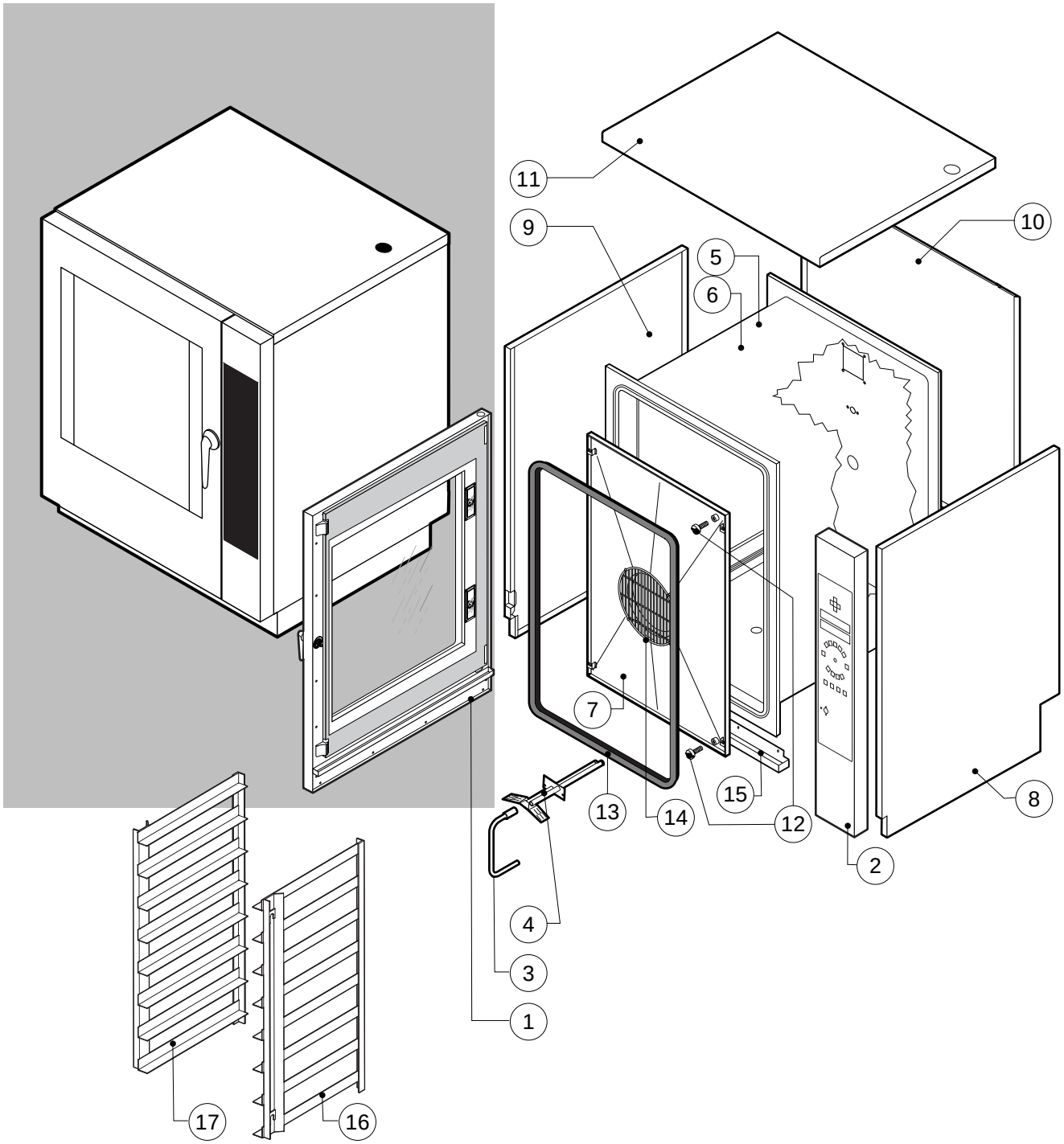

POS.	CODE	PIECES	DESCRIPTION
1	R11101090	1	DOOR ASSEMBLY
2	R11202020	1	CONTROL PANEL
3	R11201970	1	SPRITZER EXTENSION
4	R11208750	1	SPRITZER UNION
5	R11224620	1	COOKING CABINET ASSEMBLY
6	R11224740	1	COOKING CABINET ASSEMBLY
7	R11209600	1	FAN GUARD PANEL ASSEMBLY
8	R11202130	1	RIGHT SIDE PANEL
9	R11202140	1	LEFT SIDE PANEL
10	R11403990	1	REAR PANEL
11	R11217130	1	COVER PANEL
12	R58003100	2	FAN GUARD FASTENING SCREW
13	R70044110	1	FRONT GASKET
14	R75300090	1	FAN GUARD GRID Ø 350
15	R69180170	1	DRIP TRAY
16	R11201870	1	REMOVABLE RACK DX
17	R11201880	1	REMOVABLE RACK SX

POS.	CODE	PIECES	DESCRIPTION

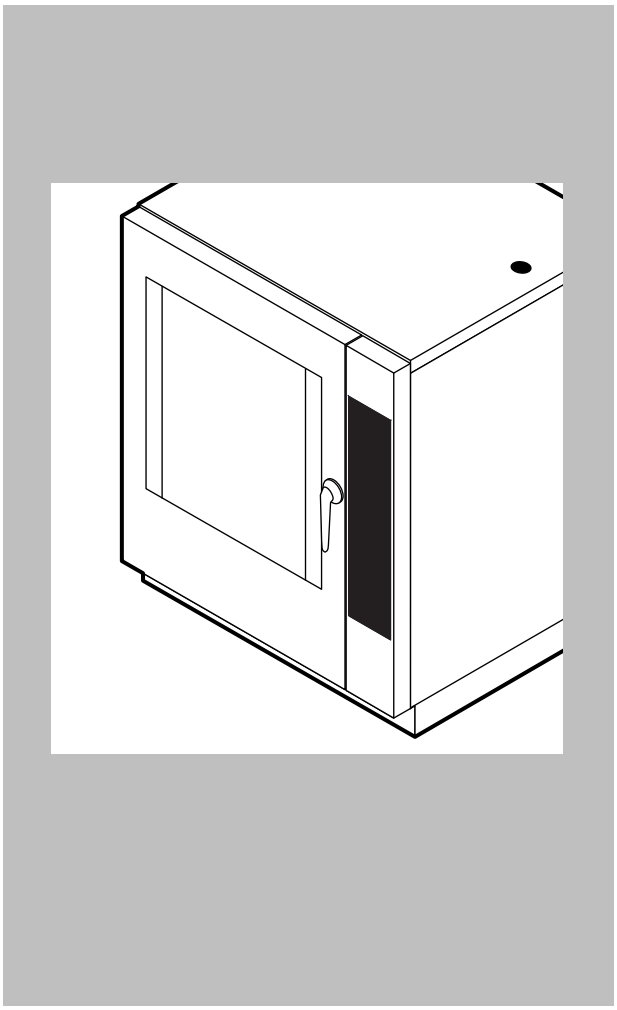

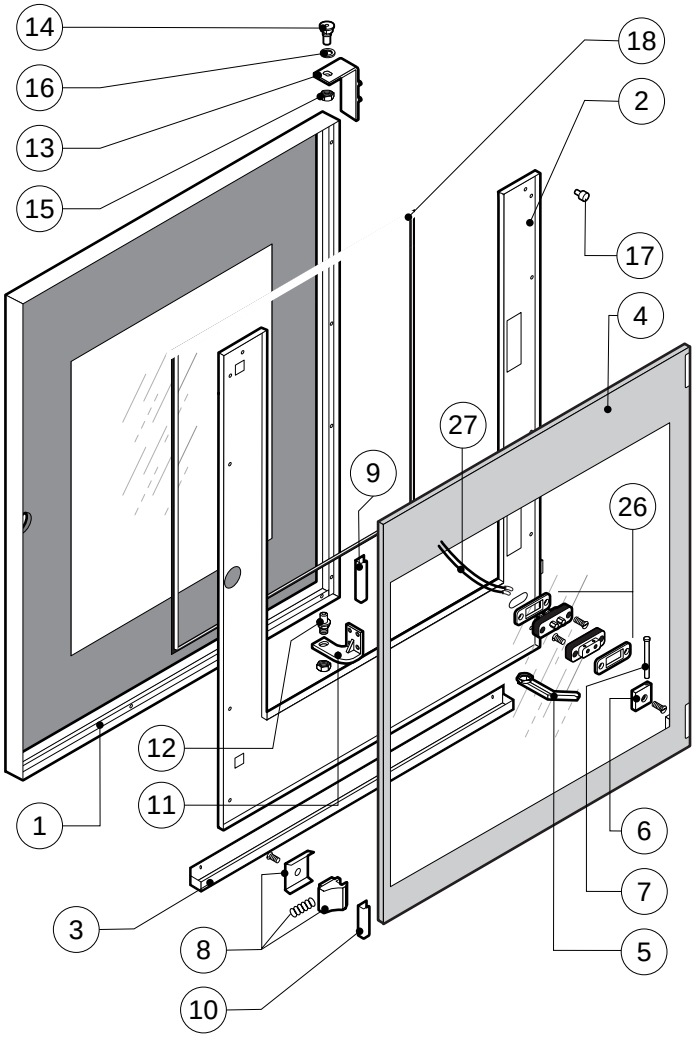

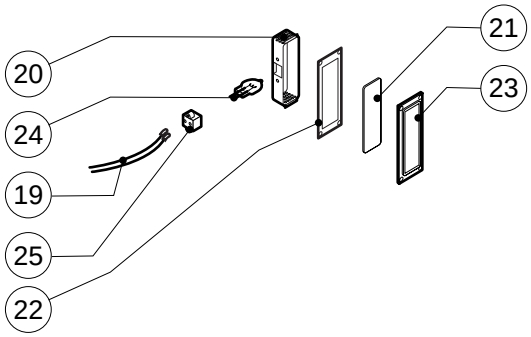

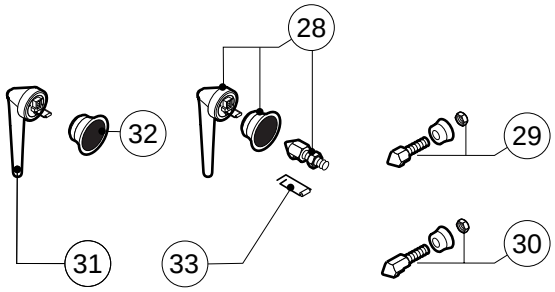

POS.	CODE	PIECES	DESCRIPTION
1	R11101380	1	DOOR
2	R11217600	1	INNER DOOR PANEL
3	R69180180	1	INNER DOOR PANEL DRIP TRAY
4	R11100140	1	INNER DOOR GLASS
5	R69180000	1	DOOR DRIP TRAY DRAINAGE
6	R58001760	2	INNER GLASS SOLID HINGE
7	R58001770	2	INNER GLASS HINGE PIN
8	R58001780	2	INNER GLASS CATCH KIT
9	R11401340	1	TOP "C" PROFILE
10	R11401360	1	LOWER "C" PROFILE
11	R11207240	1	LOWER DOOR HINGE
12	R58002670	1	LOWER HINGE PIN
13	R11200560	1	UPPER DOOR HINGE
14	R58002150	1	HINGE PIN
15	R58004050	2	NUT FOR UPPER DOOR HINGE
16	R10401710	1	WASHER FOR UPPER DOOR HINGE
17	R70050100	6	GLASS SILICON SPACERS
18	R70044150	1	GLASS GASKET
19	R66110320	1	DOOR LAMPS CABLE SET

POS.	CODE	PIECES	DESCRIPTION
20	R11401440	2	LAMP COVER
21	R71500150	2	GLASS LAMP
22	R70044200	2	LAMP GASKET
23	R11401450	2	GLASS HOLDER LAMP FLANGE
24	R65270020	2	LIGHT 20W 12V G4
25	R65270450	2	LIGHT SOCKET
26	R65260750	1	LAMPS CONTACT BLOCK
27	R66110300	1	LAMPS CONTACT CABLE SET
28	R11100300	1	DOOR HANDLE ASSEMBLY
29	R69010260	1	DOOR LATCH 1 STEP
30	R69010270	1	DOOR LATCH 2 STEP
31	R69010250	1	DOOR CATCH KIT
32	R69010630	1	INNER DOOR CATCH PLASTIC COVER
33	R61620132	1	PRONG FLANGE

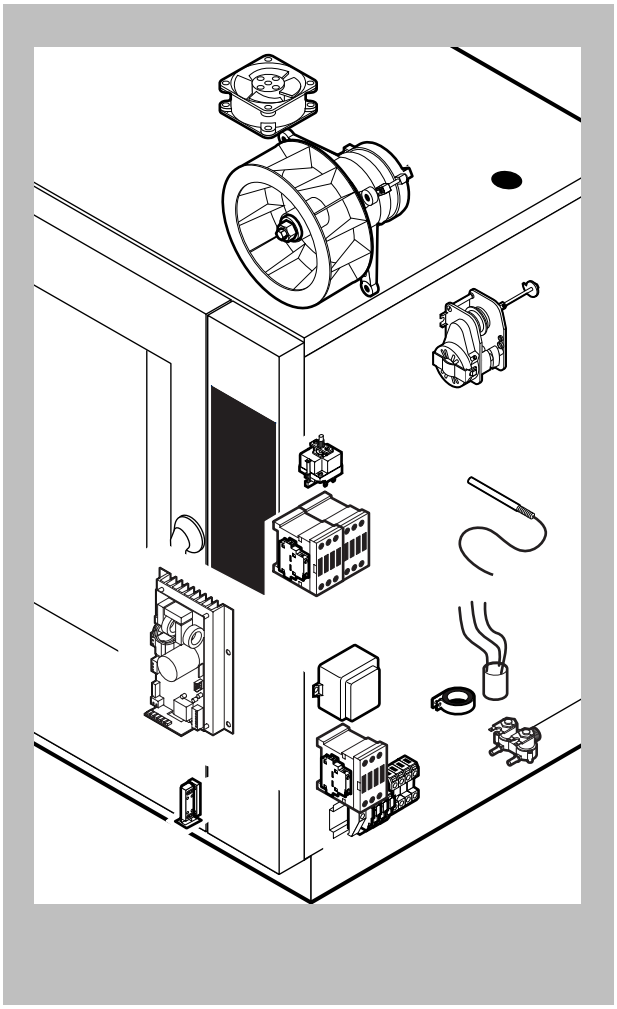

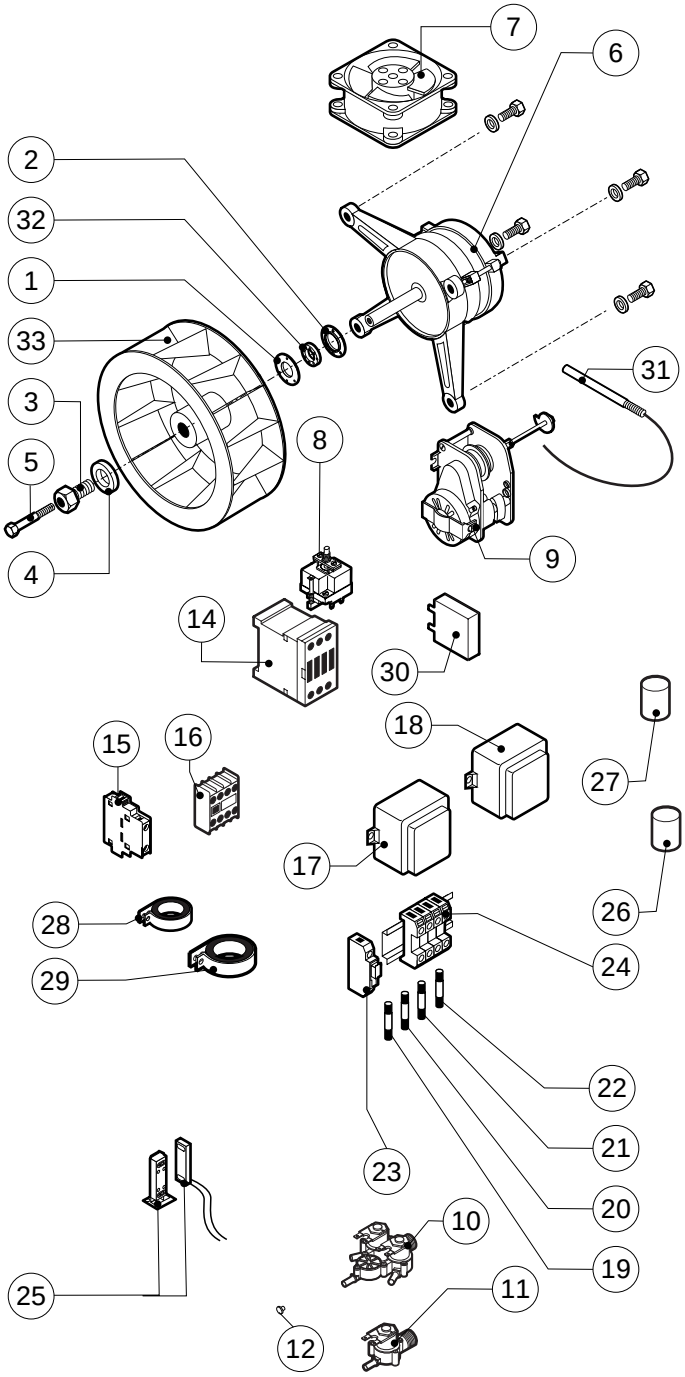

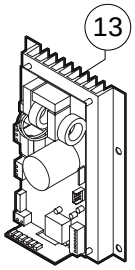

POS.	CODE	PIECES	DESCRIPTION
1	R58003840	1	MOTOR GASKET BRASS FLANGE
2	R58003850	1	MOTOR GASKET BRASS COUNTER FLANGE
3	R58004000	1	FAN SCREW M12x1.5 SX
4	R58004010	1	FAN WASHER Ø 30/12.5
5	R61020562	1	FAN SCREW TE A2 M6x55
6	*R65040530	1	MOTOR 055 KW 200/440V KIT
7	R65060050	2	COMPONENTS VENTILATION MOTOR Ø 120
8	R65070350	1	CHAMBER SAFETY THERMOSTAT
9	R65095000	1	DAMPER SYSTEM
10	R65110240	1	SOLENOID VALVE 220V 50HZ
11	R65110200	1	SOLENOID VALVE 220V 50HZ
12	R65110510	1	15 LT/H WATER FLOW REDUCER
13	R65140830	1	INVERTER 0,8KW
14	*R65140710	3	CONTACTOR DIL M17-01 7,5KW-35A
15	*R65140740	2	AUX.CONTACT 1L+1R DILM32-XHI11-S 7,5KW
16	*R65140730	1	AUX.CONTACT 1L+1R DILM32-XHI11 4-7,5KW
17	R65180430	1	TRANSFORMER 40VA
18	R65180420	1	TRANSFORMER 20VA
19	R65200370	1	FUSE 8A

POS.	CODE	PIECES	DESCRIPTION
20	R65200200	1	FUSE 2A
21	R65200350	1	FUSE 0.200A (T)
22	R65200086	1	FUSE 0.125A (T)
23	R65210020	4	FUSE CARRIER
24	R65220290	1	TERMINAL BOARD
25	R65265100	1	DOOR SWITCH
26	*R65280240	1	INTERFERENCE SUPPRESSOR
27	*R65280250	1	POWER SUPPRESSOR
28	*R65280480	1	FERRITE FT25
29	*R65280510	1	FERRITE FT58
30	R65147110	2	SURGE SUPPRESSOR
31	R65325000	2	PROBE PT100
32	R70020050	1	MOTOR GASKET
33	R75400440	1	FAN Ø 350x114/12 50HZ P.D. KIT

*COMPONENT SUBMITTED TO CHANGEMENTS CAUSED BY TENSION DIFFERENT FROM THE STANDARD (3N AC400V 50HZ)

EDIZIONE 0908

EPE 086 T tav. C

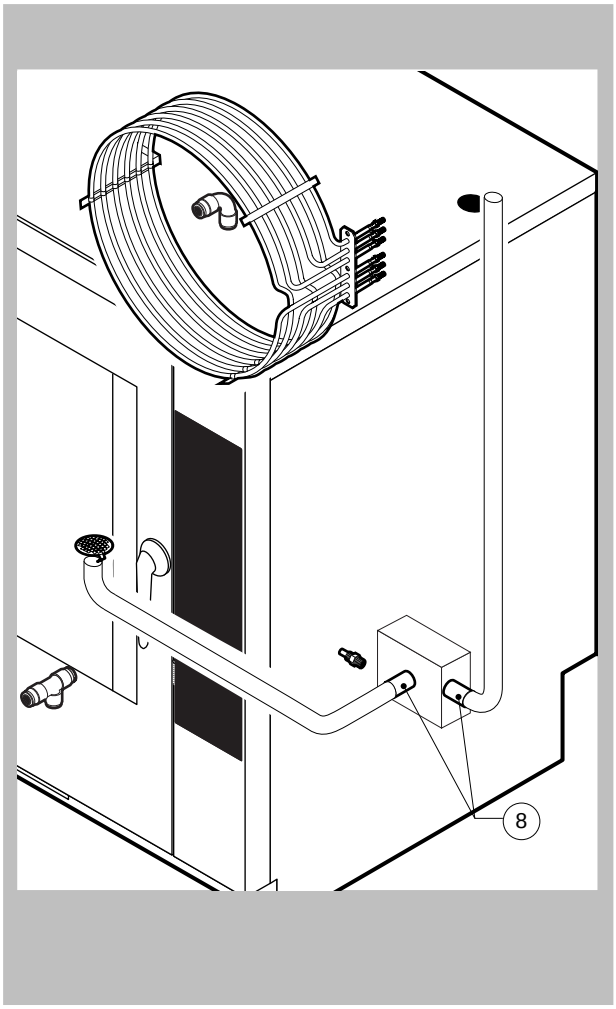

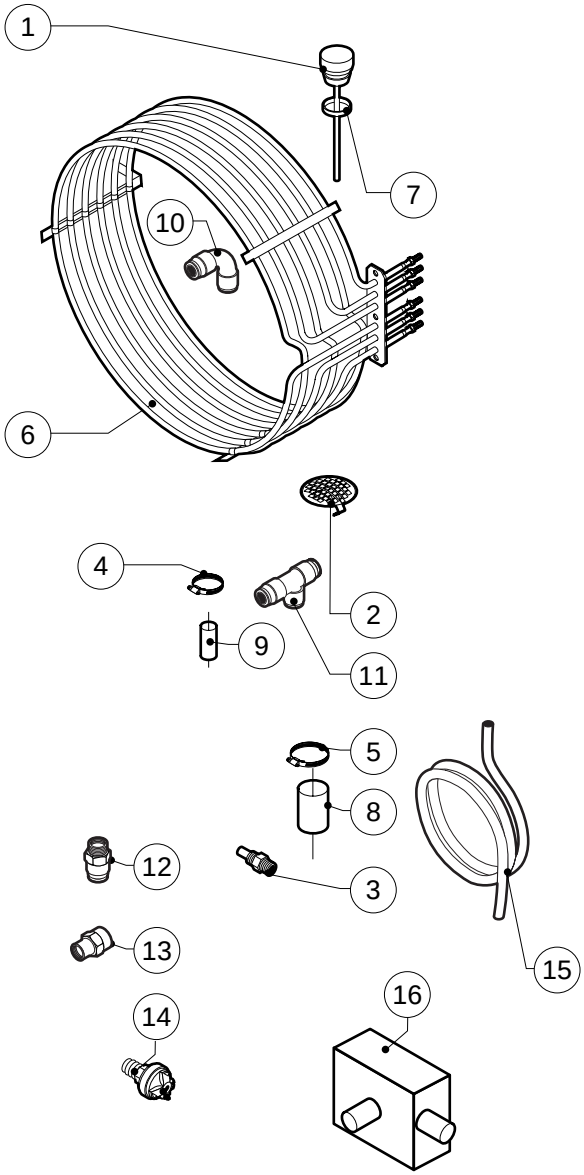

POS.	CODE	PIECES	DESCRIPTION
1	R10100140	1	DAMPER SYSTEM CAP
2	R10201700	1	DRAIN FILTER
3	R58006130	2	STEAM QUENCHING NOZZLE Ø 1
4	R61630011	2	METAL CLAMPS 12-22/9
5	R61630031	4	METAL CLAMPS 40-60/9
6	*R65011310	1	CHAMBER HEATING ELEMENT 15000W
7	R70060020	1	DAMPER SYSTEM CAP GASKET
8	R70060040	2	SILICON COUPLING Ø 50
9	R70060080	1	SILICON COUPLING Ø 13
10	R62090478	5	ELBOW MIDDLING PIPE FITTING D.10
11	R62090468	1	"T" MIDDLING PIPE FITTING D.10
12	R62090508	1	10X1/4 STRAIGHT THREADED TERMINAL PIPE FITTING
13	R62030118	1	1/8"-1/4" FEMALE REDUCTION COUPLING
14	R63070050	1	WATER SAFETY PRESSURE SWITCH 1/8" 0,5-0,35 BAR
15	R70070050	1	PE D.10 MM X7 WATER FLEXIBLE PIPE (3 MT LONG)
16	R69180100	1	QUENCHING-DRAIN COLLECTOR

POS.	CODE	PIECES	DESCRIPTION

*COMPONENT SUBMITTED TO CHANGEMENTS CAUSED BY TENSION DIFFERENT FROM THE STANDARD (3N AC400V 50HZ)

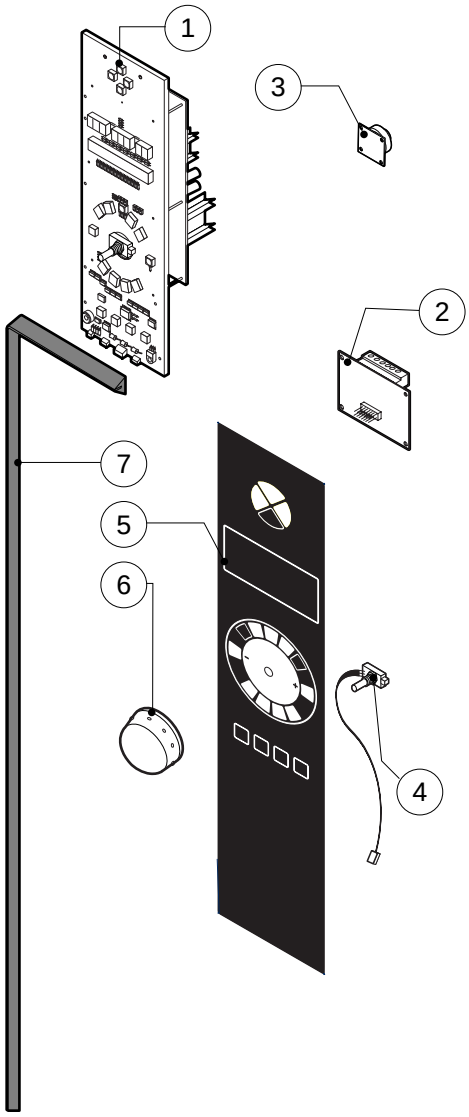

POS.	CODE	PIECES	DESCRIPTION
1	R65301690	1	CONTROL PANEL P.C. BOARD "T" MOD
2	R65301490	1	INVERTER CONTROL PC BOARD
3	R65301440	1	PC BOARD BUZZER
4	R65301450	1	FRONT PC BOARD ENCODER
5	R67013550	1	LAINOX PLATE "T"
6	R69030250	1	KNOB
7	R70044260	1	CONTROL PANEL GASKET

POS.	CODE	PIECES	DESCRIPTION

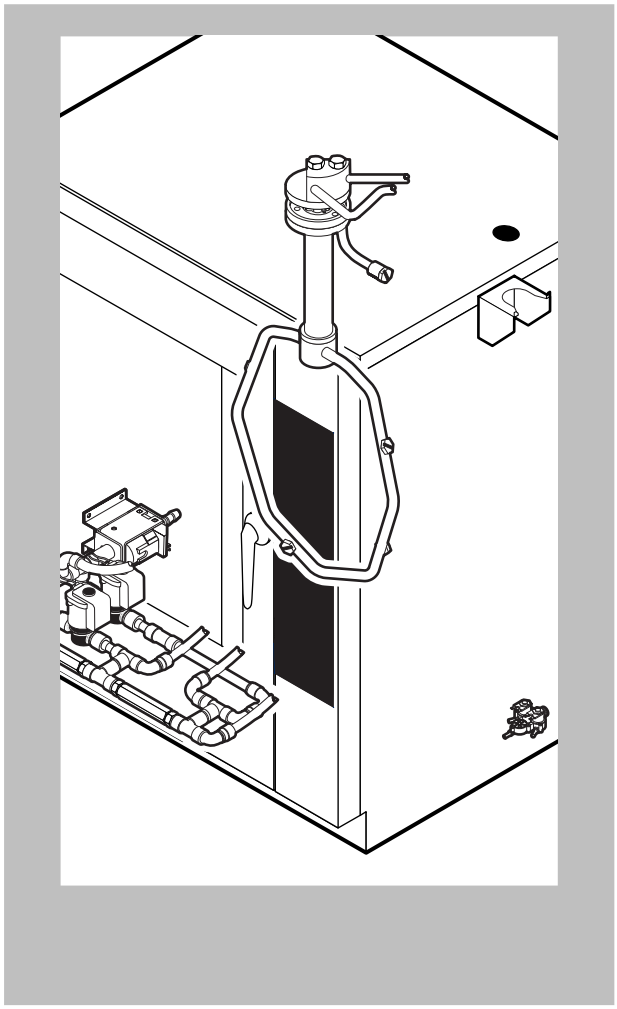

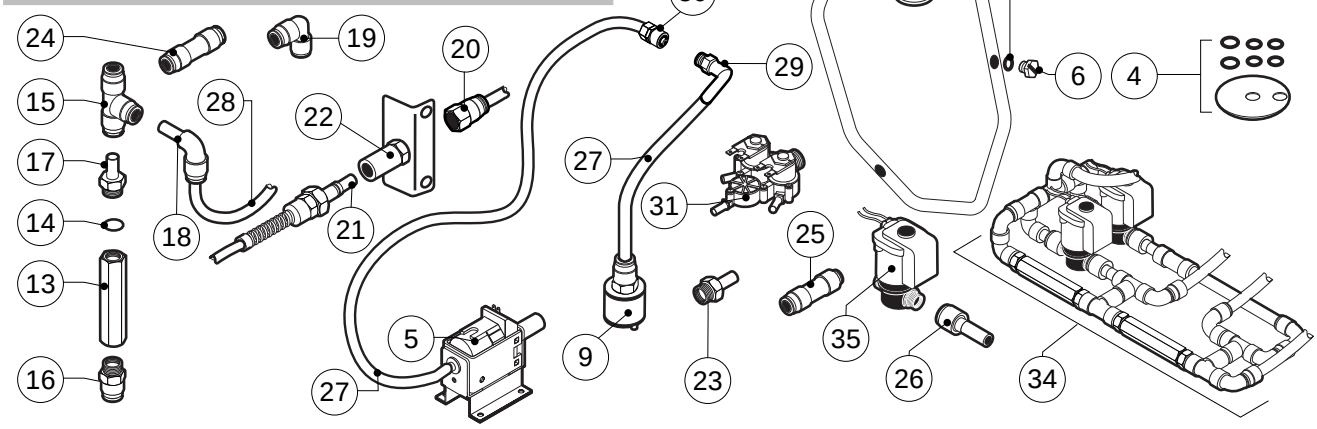

POS.	CODE	PIECES	DESCRIPTION
1	R11200881	1	WASHING SYSTEM EXTERNAL ASSEMBLY
2	R58004960	1	WASHING SYSTEM INNER FLANGE
3	R11100510	1	WASHING DEVICE ASSEMBLY
4	R70045090	1	GASKETS KIT
5	R65110600	1	DETRGENT PUMP
6	R62210032	4	1,3 L/MIN RINSING JET
7	R62210042	1	0,56 L/MIN DETERGENT JET
8	R58004980	2	WASHING DEVICE ROTATION BUSH
9	R65110650	1	BOTTOM FILTER
10	R62220012	2	SPHERA D.14
11	R61620041	2	SPRING
12	R58005000	2	1/2" MALE COVER
13	R65110640	2	ANTI-BACK FLOW
14	R70010050	4	OR GASKETS
15	R62090468	5	"T" MIDDLING PIPE FITTING D.10
16	R62090508	1	10X1/4 STRAIGHT THREADED TERMINAL PIPE FITTING
17	R62090518	3	10X1/4 END SIDE PIPE FITTING (WITH TANG)
18	R62090528	10	ELBOW PIPE FITTING (WITH TANG) 10 X 10
19	R62090478	4	ELBOW MIDDLING PIPE FITTING D.10

POS.	CODE	PIECES	DESCRIPTION
20	R62090538	1	1/4" FEMALE STRAIGHT PIPE FITTING FOR D.8X6 PIPE
21	R62090482	1	RAPID MALE PIPE FITTING
22	R62090492	1	RAPID FEMALE PIPE FITTING
23	R62090608	2	8X1/8 END SIDE PIPE FITTING (WITH TANG)
24	R62090458	2	STRAIGHT MIDDLING PIPE FITTING D.10
25	R62090618	1	10-8 REDUCTION PIPE FITTING
26	R62090548	4	10-6 REDUCTION PIPE FITTING
27	R70070100	1	PE D.8 MM X 6 DETERGENT FLEXIBLE PIPE
28	R70070050	1	PE D.10 MM X7 WATER FLEXIBLE PIPE (3 MT LONG)
29	R62090648	1	ELBOW PIPE FITTING
30	R62090658	1	1/8" FEMALE STRAIGHT PIPE FITTING FOR D.8X6 PIPE
31	R65110240	1	SOLENOID VALVE 220V 50HZ WITH FLOW REDUCER
32	R11402000	1	WASHING DEVICE EXTERNAL HOLDER
33	R11100570	1	TUBE DEVICE SUPPORT WASHING
34	R62300028	1	ANTI-BACK FLOW DEVICE ASSEMBLY
35	R65110260	2	SOLENOID VALVE D.6 220V 50HZ