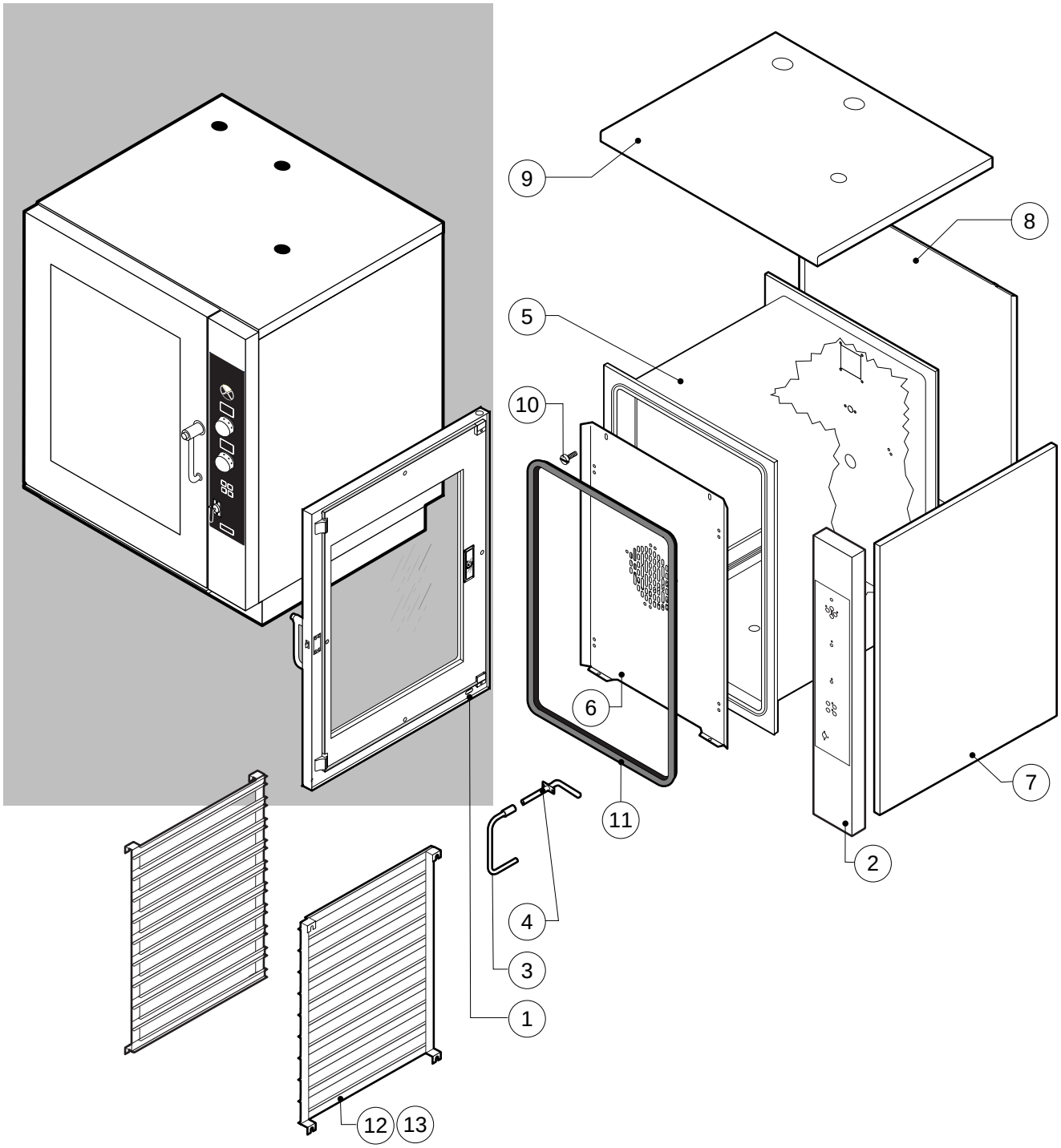

POS.	CODE	PIECES	DESCRIPTION
1	R18100070	1	DOOR ASSEMBLY
2	R18210311	1	CONTROL PANEL
3	R11201990	1	SPRITZER EXTENSION
4	R11202270	1	SPRITZER UNION
5	R18210290	1	COOKING CABINET ASSEMBLY
6	R18408290	1	FAN GUARD PANEL ASSEMBLY
7	R18408380	2	SIDE PANEL
8	R18408370	1	REAR PANEL
9	R18418130	1	COVER PANEL
10	R58006400	4	FAN GUARD FASTENING SCREW
11	R70044110	1	FRONT GASKET
12	R18203980	2	REMOVABLE RACK
13	R18203990	2	REMOVABLE RACK

POS.	CODE	PIECES	DESCRIPTION

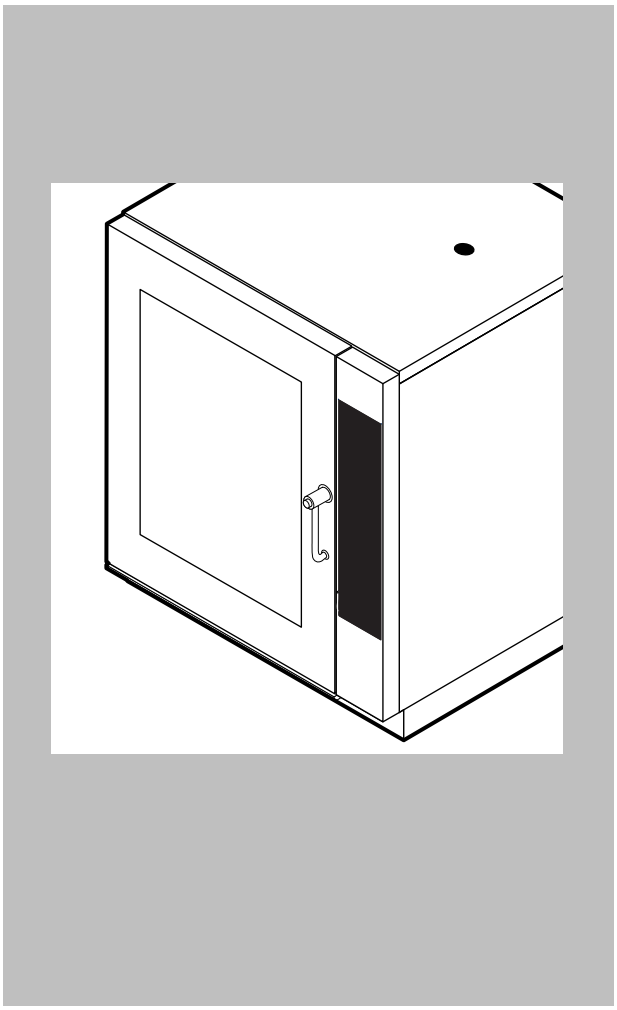

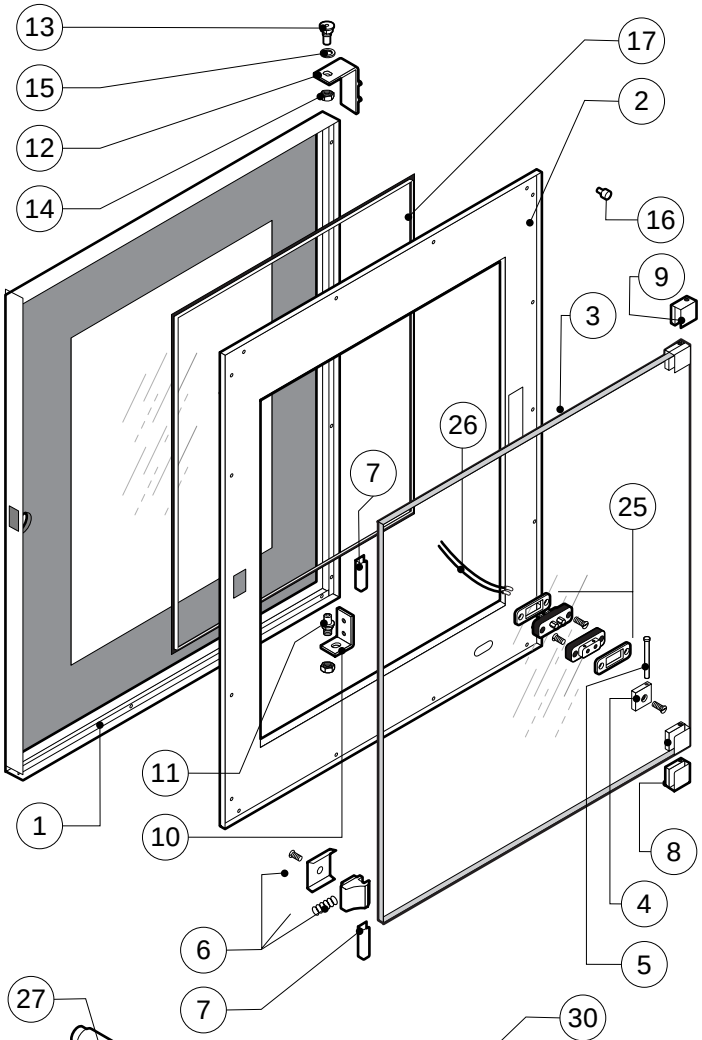

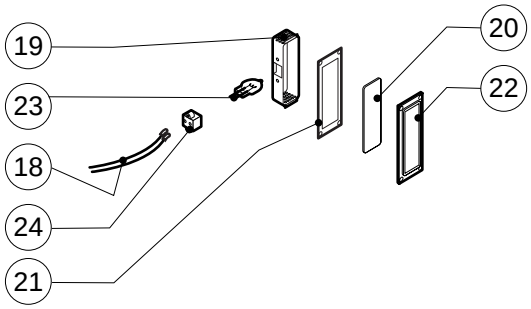

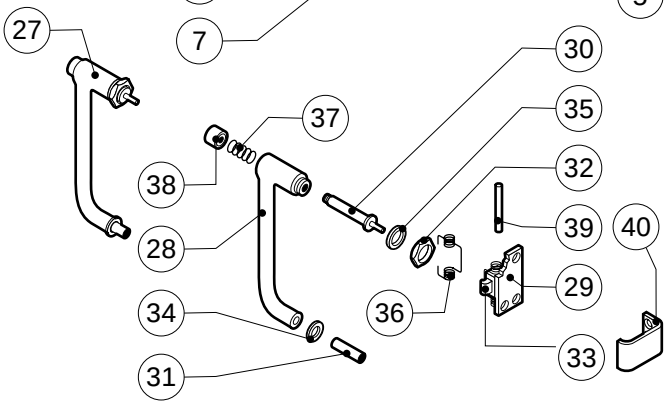

POS.	CODE	PIECES	DESCRIPTION
1	R18203970	1	DOOR
2	R18203950	1	INNER DOOR PANEL
3	R71201510	1	INNER DOOR GLASS
4	R58001760	2	INNER GLASS SOLID HINGE
5	R58001770	2	INNER GLASS HINGE PIN
6	R58001780	2	INNER GLASS CATCH KIT
7	R11401340	2	TOP "C" PROFILE
8	R18203910	1	LOWER SUPPORT GLASS
9	R18203920	1	TOP SUPPORT GLASS
10	R18404500	1	LOWER DOOR HINGE
11	R58002520	1	LOWER HINGE PIN
12	R11200560	1	UPPER DOOR HINGE
13	R58002150	1	HINGE PIN
14	R58004050	2	NUT FOR UPPER DOOR HINGE
15	R10401710	1	WASHER FOR UPPER DOOR HINGE
16	R70050100	6	GLASS SILICON SPACERS
17	R70044150	1	GLASS GASKET
18	R66110320	1	DOOR LAMPS CABLE SET
19	R11401440	1	LAMP COVER
20	R71500150	1	GLASS LAMP
21	R70044200	1	LAMP GASKET

POS.	CODE	PIECES	DESCRIPTION
22	R11401450	1	GLASS HOLDER LAMP FLANGE
23	R65270020	1	LIGHT 20W 12V G4
24	R65270450	1	LIGHT SOCKET
25	R65260750	1	LAMPS CONTACT BLOCK
26	R66110300	1	LAMPS CONTACT CABLE SET
27	R69015000	1	DOOR HANDLE ASSEMBLY
28	R09200230	1	DOOR HANDLE
29	R10100110	1	PRONG FLANGE
30	R58003240	1	DOOR HANDLE BUTTON ROD
31	R58004270	1	DOOR HANDLE SPACER
32	R58004830	1	RING NUT M18x1
33	R58005050	1	DOOR HANDLE PRONG
34	R58005340	1	DOOR HANDLE LOWER INSULATION WASHER
35	R58005350	1	DOOR HANDLE UPPER INSULATION WASHER
36	R61620012	1	DOOR HANDLE CATCH SPRING
37	R61620041	1	DOOR HANDLE BUTTON SPRING
38	R69031190	1	DOOR HANDLE PUSH BUTTON
39	R58002160	1	DOOR HANDLE PRONG PIN
40	R18202020	1	DOOR HANDLE PRONG COUPLER

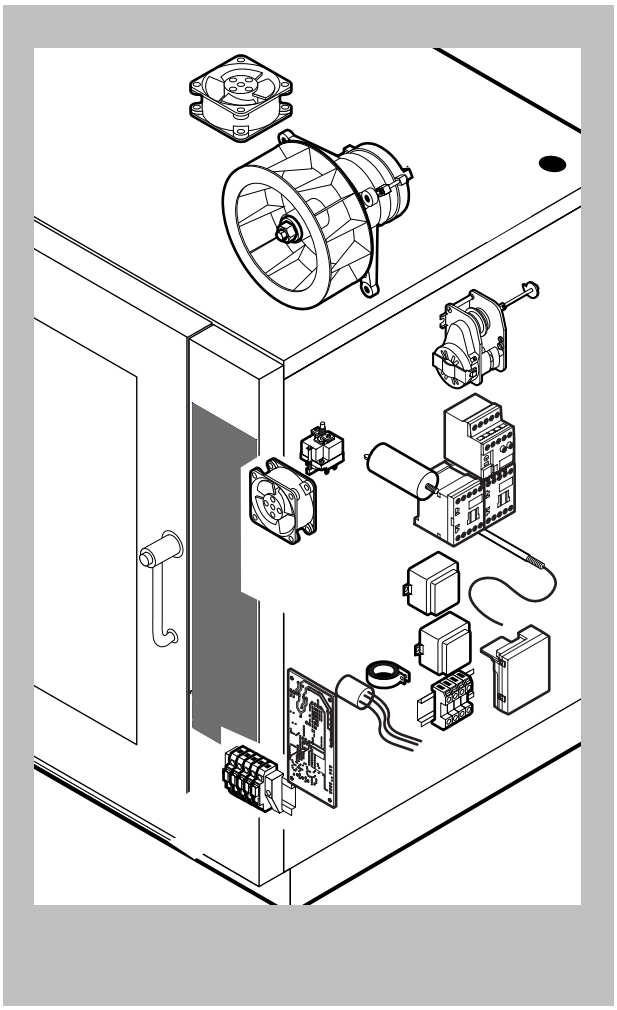

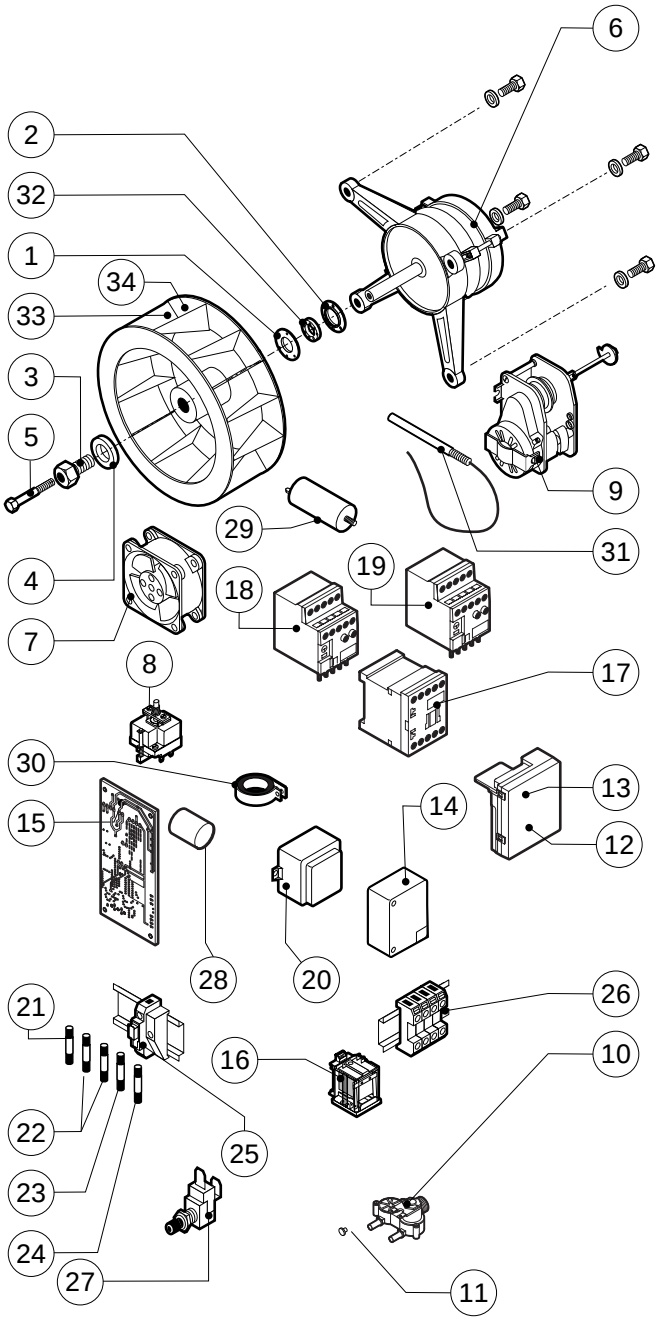

POS.	CODE	PIECES	DESCRIPTION
1	R58003840	1	MOTOR GASKET BRASS FLANGE
2	R58003850	1	MOTOR GASKET BRASS COUNTER FLANGE
3	R58004000	1	FAN SCREW M12x1.5 SX
4	R58004010	1	FAN WASHER Ø 30/12.5
5	R61020562	1	FAN SCREW TE A2 M6x55
6	*R65040540	1	MOTOR KW 055/15 F1 4-6P 240V KIT
7	R65060050	2	COMPONENTS VENTILATION MOTOR Ø 120
8	R65070350	1	CHAMBER SAFETY THERMOSTAT
9	R65095000	1	DAMPER SYSTEM
10	R65110230	1	SOLENOID VALVE 220V 50HZ
11	R65110510	1	15 LT/H WATER FLOW REDUCER
12	R63060140	1	BURNER IGNITION PANEL UNTIL N¤5207
13	R63060160	1	BURNER IGNITION PANEL FROM N¤0108
14	R65180270	1	IGNITION TRANSFORMER FROM N¤0108
15	R63130050	1	GAS BURNER FAN MOTOR PCBOARD
16	R65170100	1	RELAY 240V AC 16A 62.82300308
17	*R65140700	4	CONTACTOR DIL M9-01 4KW-20A
18	*R65160770	1	THERMIC PROTECTION ZB12-2,4
19	*R65160780	1	THERMIC PROTECTION ZB12-4
20	R65180420	2	TRANSFORMER 20VA
21	R65200200	1	FUSE 2A

POS.	CODE	PIECES	DESCRIPTION
22	R65200160	2	FUSE 1A
23	R65200350	1	FUSE 0.400A (T)
24	R65200086	1	FUSE 0.125A (T)
25	R65210020	5	FUSE CARRIER
26	R65220220	1	TERMINAL BOARD
27	R65260540	1	DOOR SWITCH
28	*R65280230	1	INTERFERENCE SUPPRESSOR
29	*R65190050	1	CAPACITOR 20 ¤F
30	*R65280490	1	FERRITE FT35
31	R65325000	2	PROBE PT100
32	R70020050	1	MOTOR GASKET
33	*R75400440	1	FAN Ø 350x114/12 50HZ P.D. KIT
34	R75400470	1	FAN Ø 350x114/12 60HZ P.D. KIT

*COMPONENT SUBMITTED TO CHANGEMENTS CAUSED BY TENSION DIFFERENT FROM THE STANDARD (AC 230V 50HZ)

EDIZIONE 0908

BPG 084-104 P tav. C

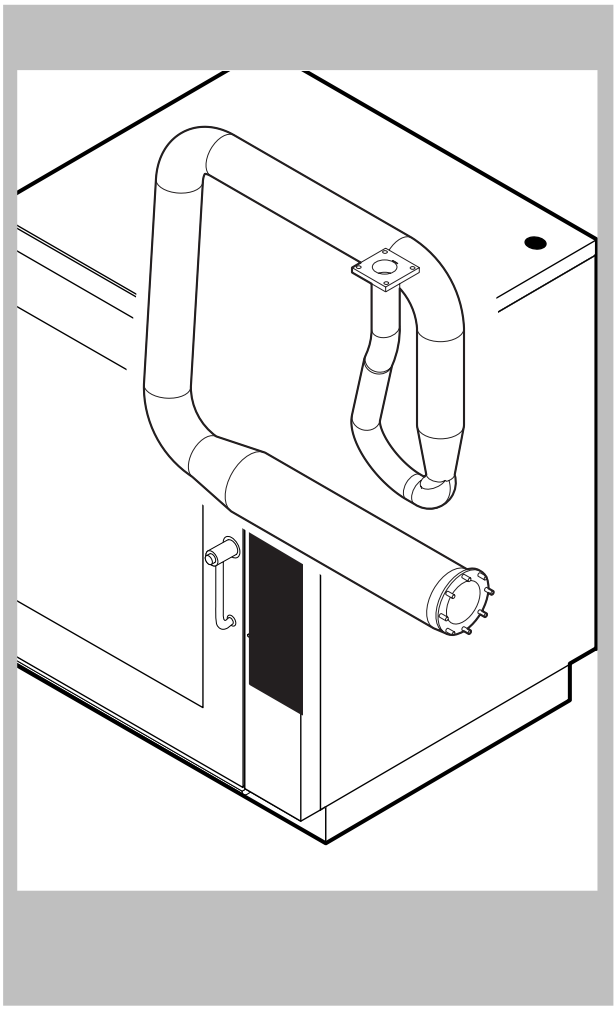

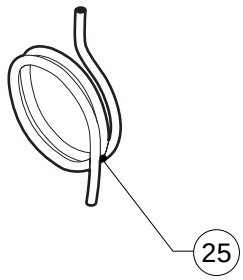

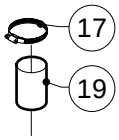

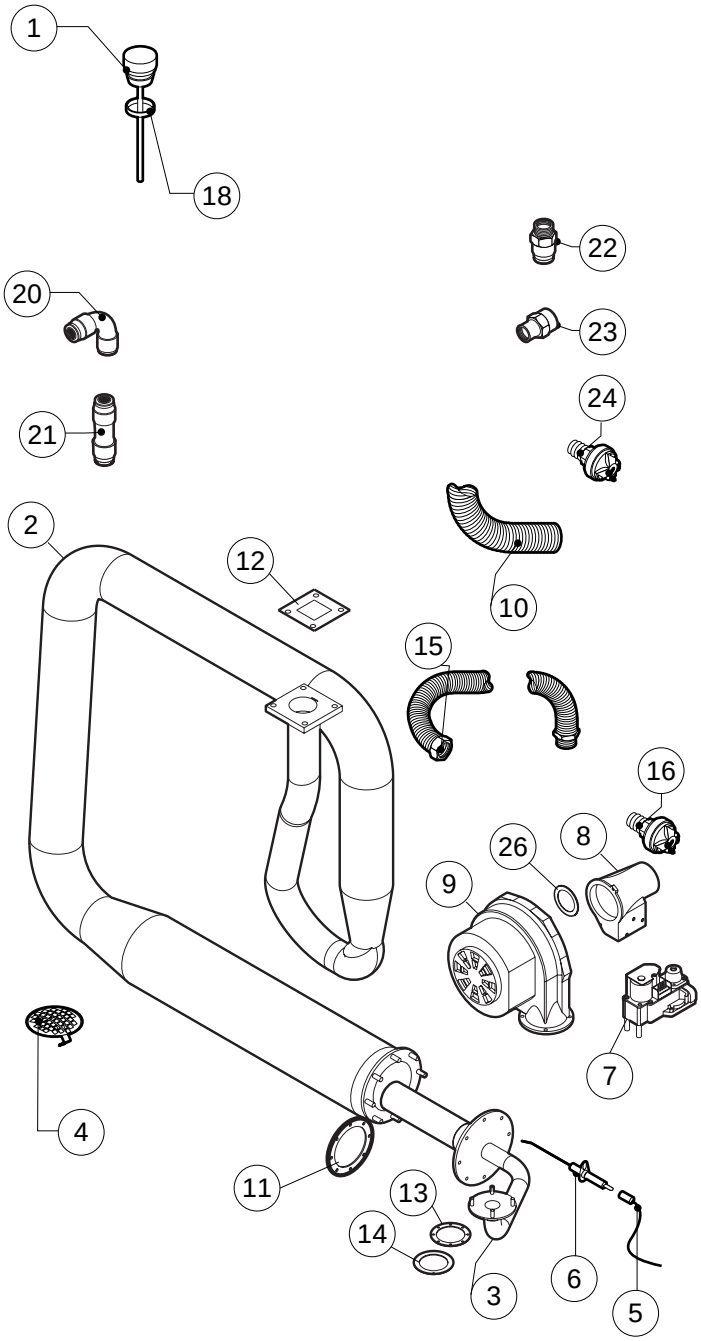

POS.	CODE	PIECES	DESCRIPTION
1	R10100140	1	DAMPER SYSTEM CAP
2	R18210270	1	HEAT EXCHANGER ACCESSORIES INCLUDED
3	R11218001	1	COOKING CABINET BURNER
4	R10201710	1	DRAIN FILTER
5	R66605820	1	FLAME IGNITION CABLE/FLAME SENSOR CABLE
6	R63050130	3	IGNITOR
7	R63020170	1	GAS SOLENOID VALVE
8	R63120030	1	VENTURI TUBE
9	R65060360	1	GAS BURNER FAN MOTOR
10	R77700056	1 MT	AIR INLET FLEXIBLE PIPE
11	R63140080	2	BURNER/HEAT EXCHANGER GASKET
12	R63140010	2	HEAT EXCHANGER GASKET
13	R63140050	2	BURNER/FAN MOTOR GASKET
14	R11430350	1	ORIFICE D.18
15	R62180082	1	GAS INLET FLEXIBLE PIPE
16	R63070010	1	GAS SAFETY PRESSURE SWITCH PG 901.61
17	R61630021	2	METAL CLAMPS 30-45/9
18	R70060020	1	DAMPER SYSTEM CAP GASKET
19	R70060010	1	SILICON COUPLING Ø 30

POS.	CODE	PIECES	DESCRIPTION
20	R62090478	6	ELBOW MIDDLING PIPE FITTING D.10
21	R62090458	1	STRAIGHT MIDDLING PIPE FITTING D.10
22	R62090508	1	10X1/4 STRAIGHT THREADED TERMINAL PIPE FITTING
23	R62030118	1	1/8"-1/4" FEMALE REDUCTION COUPLING
24	R63070050	1	WATER SAFETY PRESSURE SWITCH 1/8" 0,5-0,35 BAR
25	R70070050	1	PE D.10 MM X7 WATER FLEXIBLE PIPE (3 MT LONG)
26	R58004190	1	ORIFICE

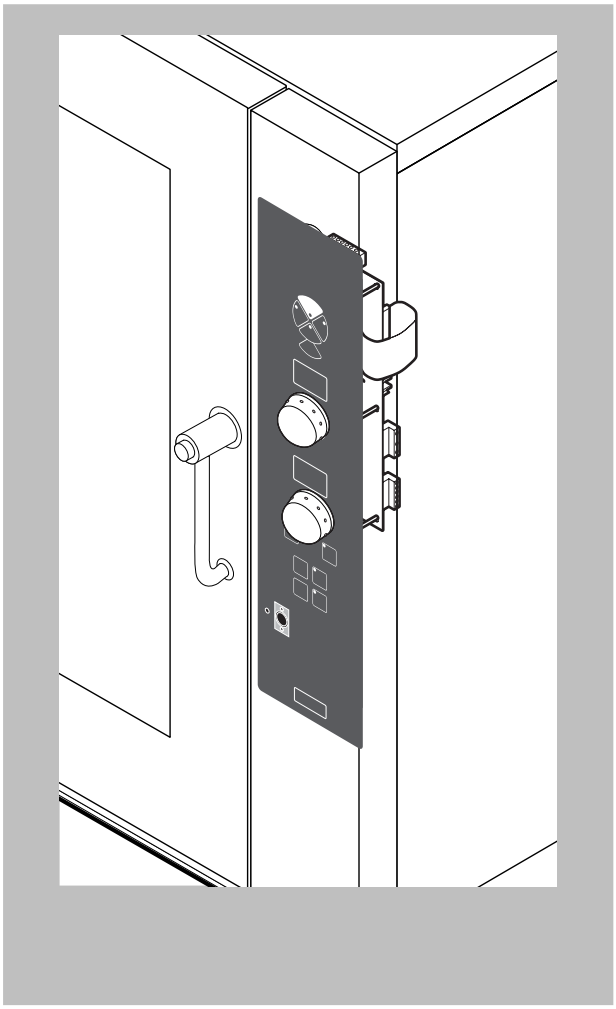

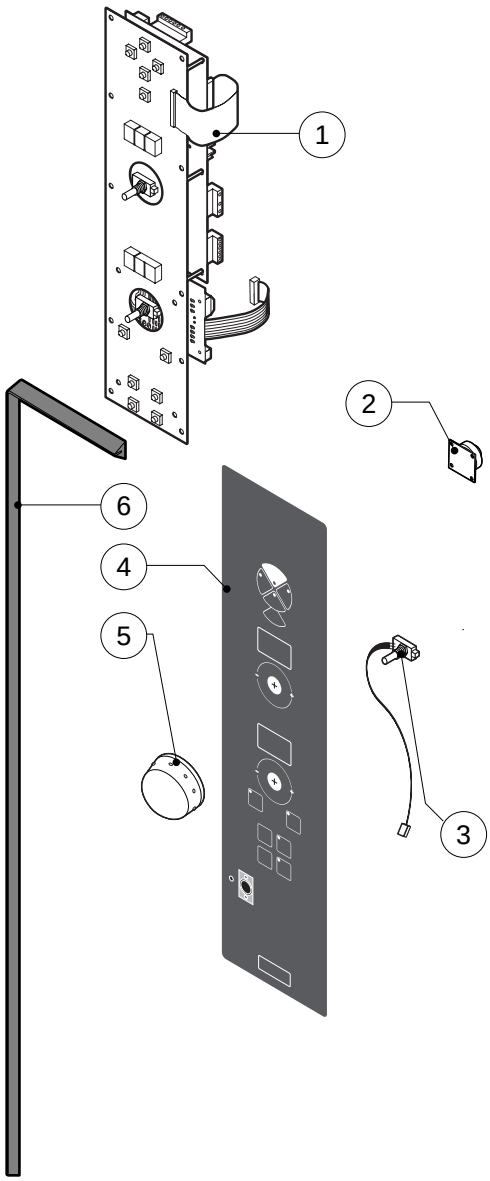

POS.	CODE	PIECES	DESCRIPTION
1	R65302170	1	CONTROL PANEL P.C. BOARD "P" MOD
2	R65301440	1	PC BOARD BUZZER
3	R65301450	2	FRONT PC BOARD ENCODER
4	R67014010	1	PLATE "P"
5	R69030260	2	KNOB
6	R70044260	1	CONTROL PANEL GASKET

POS.	CODE	PIECES	DESCRIPTION